DAIKIN

DTG COMMERCIAL

3 - 5 TONS GAS/ ELECTRIC UNITS
UP TO 15.5 SEER AND 13.0 EER
UP TO 81% AFUE

Cooling Capacity: 35,600 — 60,000 BTU/h

Heating Capacity: 46,000 - 138,000 BTU/h

Contents

Nomenclature 2
Product Specifications 4
Expanded Cooling Data.....6
Airflow Data 18
Crankcase Heater 21
Electrical Data 22
Dimensions.....23
Wiring Diagrams 27
– for Models with DDC Controls 37
Accessories.....48

Standard Features

- Patented tubular heat exchange
- High-efficiency scroll compressor
- Copper tube/aluminum fin coils
- High- and low-pressure switches
- Contactor with lugs
- High-capacity, steel-cased filter drier
- 24-volt terminal strip
- Convertible airflow orientation
- Easy to service
- Built-in filter rack with standard 2” filters
- Bottom utility entry
- Complies with California Low NOx emissions standards
- AHRI Certified; ETL Listed
- 3-phase unit meets the performance specified as of 1/1/2015 in Table 6.8.1-1 of ASHRAE Standard 90.1-2013

Cabinet Features

- Heavy-gauge, galvanized-steel cabinet with UV-resistant powder-paint finish
- Full Perimeter Rail
- Sloped drain pan

* Complete warranty details available from your local distributor or manufacturer’s representative or at www.daikincomfort.com.

D	T	G	060	090	3	V	*	*	*	A	*
1	2	3	4,5,6	7,8,9	10	11	12	13	14	15	16

Brand
D Daikin

Configuration
C Standard Efficiency (6 - 25 Tons)
S Standard Efficiency (3 - 5 Tons)
T High Efficiency (3 - 5 Tons)

Application
C Cooling[1]
G Gas Heat
H Heat Pump[1]

Nominal Cooling Capacity

036	3 Tons	102	8½ Tons	300	25 Tons
048	4 Tons	120	10 Tons		
060	5 Tons	150	12½ tons		
072	6 Tons	180	15 Tons		
090	7½ Tons	240	20 Tons		

Nominal Heating Capacity

Gas/Electric		A/C H/P Factory-Installed Electric Heat			
045	45,000 BTU/h	XXX	No Heat		
090	90,000 BTU/h	010	10 kW	030	30 kW
115	115,000 BTU/h	015	15 kW	031	30 kW
140	140,000 BTU/h	016	15 kW	045	45 kW
210	210,000 BTU/h	018	18 kW	046	45 kW
350	350,000 BTU/h	020	20 kW	060	60 kW
400	400,000 BTU/h	025	25 kW		

See product specifications for heat size(s) available for each capacity.

Voltage
1 208-230/1/60 (DS* & DT* 3-5 Tons models only)
3 208-230/3/60
4 460/3/60
7 575/3/60

Supply Fan/Drive Type/Motor
B Belt Drive (3-5 Tons single speed models only)
D Direct Drive (3-5 Tons single speed models only)
H High Static (3-5 Tons single-speed Belt Drive models only)
V Two-Speed Belt Drive (6-25 Tons only)
W High Static (6-25 Tons two-speed Belt Drive models only)

Factory-Installed Options
A Ultra Low-Leak Downflow Economizer
B DDC-BACnet protocol
F Ultra Low-Leak Downflow Economizer; DDC-BACnet protocol
H Disconnect Switch (non-fused)
J Ultra Low-Leak Downflow Economizer; Disconnect Switch (non-fused)
M Disconnect Switch (non-fused); DDC-BACnet protocol
R Ultra Low-Leak Downflow Economizer; DDC-BACnet protocol; Disconnect Switch (non-fused)
V Low-Leak Downflow Economizer
W Low-Leak Downflow Economizer Disconnect Switch (non-fused)
X No Options

Note: Not all options available for all products.

[1] X= No Options in character 13th

Revision Levels
Major & Minor

Factory-Installed Options
X No Options
A Non-powered convenience outlet
B Powered convenience outlet
C Low-ambient kit
D Return air smoke detector
E Supply air smoke detector
F Non-powered convenience outlet; Low-ambient kit
G Non-powered convenience outlet; Return air smoke detector
H Non-powered convenience outlet; Supply air smoke detector
J Non-powered convenience outlet; Return & Supply air smoke detectors
K Non-powered convenience outlet; Low-ambient kit; Supply air smoke detector
L Non-powered convenience outlet; Low-ambient kit Return & Supply air smoke detectors
M Powered convenience outlet; Low-ambient kit
N Powered convenience outlet; Return air smoke detector
O Powered convenience outlet; Return & Supply air smoke detectors
P Powered convenience outlet; Supply air smoke detector
Q Powered convenience outlet; Low-ambient kit; Return air smoke detector
R Powered convenience outlet; Low-ambient kit; Supply air smoke detector
T Powered convenience outlet; Low-ambient kit; Return & Supply air smoke detectors
U Non-powered convenience outlet; Low-ambient kit; Return air smoke detector
V Low-ambient kit; Return air smoke detector
W Low-ambient kit; Supply air smoke detector
Y Low-ambient kit; Return & Supply air smoke detectors
Z Return & Supply air smoke detectors

Factory-Installed Options
X Standard Aluminized Heat Exchanger
S Stainless-Steel Heat Exchanger
D Hinged Panels
K Stainless-Steel Heat Exchanger; Hinged Panels
B Phase Monitor
J Stainless Steel Heat Exchanger; Phase Monitor
M Hinged Panel; Phase Monitor
L Stainless-Steel Heat Exchanger; Hinged Panels; Phase Monitor

FACTORY-INSTALLED OPTIONS

- Stainless-Steel Heat Exchanger (Gas units only): A tubular heat exchanger made of 409-type stainless steel is installed in the unit.
- Low-Ambient Kit: Allows for cooling operation at lower outdoor temperatures. On the 3- to 6-ton units, cooling operation is extended from 60°F ambient temperature to 35°F outside air temperature. On 7½ -20 ton units, cooling operation is extended from 35°F ambient temperature to 0°F outside air temperature. For 25 ton units, cooling operation is extended from 24°F ambient temperature to 0°F outside air temperature.
- Economizers (Downflow): Based on air conditions, can provide outside air to cool the space.
- Electric Heat Kits (AC and heat pump units only): Available in all voltage options.
- Non-powered Convenience Outlet: A 120V, 15A, GFCI outlet makes it easier for technicians to service the unit once an electrician runs power to the outlet.
- Powered Convenience Outlet: A 120V, 15A, GFCI outlet powered with a transformer built into the unit. When a factory-installed powered convenience outlet is installed in the equipment, the unit MCA (Min. Circuit Ampacity) will increase by 7.2A/6.5A for 208/230V units, increase by 3.3A for 460V units, and by 2.6A for 575V units. The MOP (Max. Overcurrent Protection) device must be sized accordingly.
- Disconnect Switch (non-fused; 3-phase units only): A disconnect switch is installed in the unit and factory wiring will be complete from the switch to the unit. Please note that for air conditioning (DSC units) and heat pump models (DSH units), the appropriate electric heat kit must be ordered to be factory-installed along with the disconnect switch (non-fused) when it is ordered. Please note that for models with a powered convenience outlet option and a disconnect switch (non-fused) option, the power to the powered convenience outlet will be shut off when the disconnect switch (non-fused) is in the off position.
- Return Air and/or Supply Air Smoke Detectors: Return air and/or supply air smoke detectors are installed in the unit.
- Hinged Access Panels: Allows access to unit's major components. Combined with latches for easy access to control box, compressor, filters and blower motor. Available on all units.
- Two-speed indoor fan blower models are available on 6, 7½, 8½, 10, 12½, 15, 20 & 25 ton units. Section 6.4.3.10.b of ASHRAE Standard 90.1-2010 and Section 6.5.3.2.1.a of ASHRAE Standard 90.1-2013 require a minimum of two fan speeds. Section 140.4(m)1 of California Energy Commission Title 24 2013 contains a similar provision. When the units with the two-speed indoor fan blowers operate on a call for the first stage of cooling, the fan operates at low speed, which is 66% of full speed. When the units operate on a call for the second stage of cooling, the fan operates at full speed. In heating operation, the fan operates at full speed. During ventilation operation, the fan operates at low speed.
- Phase Monitor: Phase monitor (3 phase only), available for 3 - 25 ton DS, DC and DT series models. Phase monitor shall provide protection for motors and compressors against problems caused by phase loss, phase reversal and phase unbalance. Phase monitor is equipped with an LED that provides an ON or FAULT indicator.
- DDC Controller: DDC communicating controller, available for 3 - 25 ton DS, DC and DT series models with on-board BACnet® communication interface.

	DTG036 0451D***A*	DTG036 0901D***A*	DTG048 0901D***A*	DTG048 1151D***A*	DTG060 0901D***A*	DTG060 1401D***A*
COOLING CAPACITY						
Total BTU/h	35,600	35,600	45,500	45,500	59,000	59,000
Sensible BTU/h	28,000	28,000	35,000	35,000	40,000	40,000
SEER / EER	15.5 / 13.0	15.5 / 13.0	15.0/12.0	15.0/12.0	15.0/12.0	15.0/12.0
Decibels	78	78	78	78	78	78
ARI Reference #s	8377449	8377449	8377450	8377450	8377451	8377451
HEATING CAPACITY						
High Input / Output (kBTU/h)	46 / 37	92 / 75	92 / 75	115 / 93	92 / 75	138 / 112
Low Input / Output (kBTU/h)	NA	69 / 56	69 / 56	86 / 70	69 / 56	103 / 84
Annual Fuel Utilization Efficiency (%)	81.0	81.0	81.0	81.0	81.0	81.0
Temperature Rise Range (°F)	25-55	30-60 / 20-50	25-55 / 10-40	35-65 / 20-50	25-55 / 20-50	35-65 / 25-55
No. of Burners	2	4	4	5	4	6
EVAPORATOR MOTOR / COIL						
Motor Type	Direct	Direct	Direct	Direct	Direct	Direct
Wheel Dia. X Width	10 X 9	10 X 9	11 X 10	11 X 10	11 X 10	11 X 10
Indoor Nominal CFM	1,200	1,200	1,600	1,600	2,000	2,000
Motor Speed Tap (Cooling)	T3	T3	T3	T3	T3	T3
Motor Speed Tap (Heating)	T1	T5	T5	T5	T5	T5
Horsepower	1/2	1/2	1	1	1	1
Piston Size (Cooling)	0.068	0.068	0.076	0.076	0.086	0.086
Filter Size (")	14 X 20 X 2 (4)	14 X 20 X 2 (4)	14 X 20 X 2 (4)	14 X 20 X 2 (4)	16 X 20 X 2 (4)	16 X 20 X 2 (4)
Drain Size (NPT)	3/4	3/4	3/4	3/4	3/4	3/4
R-410A Refrigerant Charge (oz.)	105	105	105	105	153	153
Evaporator Coil Face Area (ft^2)	7.8	7.8	7.8	7.8	8.9	8.9
Rows Deep/ Fins per Inch	4 / 16	4 / 16	4 / 16	4 / 16	4 / 16	4 / 16
CONDENSER FAN / COIL						
Quantity of Condenser Fan Motors	1	1	1	1	1	1
Horsepower - RPM	1/4-1090	1/4-1090	1/4-1090	1/4-1090	1/3-1090	1/3-1090
Fan Diameter/ # Fan Blades	22 / 4	22 / 4	22 / 4	22 / 4	22 / 4	22 / 4
Outdoor Nominal CFM	3,800	3,800	3,800	3,800	4,200	4,200
Face Area (ft^2)	13.0	13.0	13.0	13.0	19.0	19.0
Rows Deep/ Fins per Inch	2 / 27	2 / 27	2 / 27	2 / 27	2 / 27	2 / 27
COMPRESSOR						
Quantity / Type (Single Stage)	1 / Scroll / Single	1 / Scroll / Single	1 / Scroll / Single	1 / Scroll / Single	1 / Scroll / Single	1 / Scroll / Single
Compressor RLA / LRA	14.1 / 77.0	14.1 / 77.0	19.0 / 109.0	19.0 / 109.0	25.0 / 134.0	25.0 / 134.0
ELECTRICAL DATA						
Voltage-Phase-Frequency	208/230-1-60	208/230-1-60	208/230-1-60	208/230-1-60	208/230-1-60	208/230-1-60
Indoor Blower HP / FLA	1/2 / 3.9	1/2 / 3.9	1 / 6.9	1 / 6.9	1 / 6.9	1 / 6.9
Max External Static (In. W.C.)	0.5	0.5	0.6	0.6	0.9	0.9
Outdoor Fan HP / FLA	1/4-1.4	1/4-1.4	1/4-1.4	1/4-1.4	1/3 - 2.0	1/3 - 2.0
Total Unit Amps	19.4	19.4	28.2	28.2	33.9	33.9
Min. Circuit Ampacity[1]	22.9 / 22.9	22.9 / 22.9	33.1 / 33.1	33.1 / 33.1	40.2 / 40.2	40.2 / 40.2
Max. Overcurrent Protection (amps)[2]	35 / 35	35 / 35	50 / 50	50 / 50	60 / 60	60 / 60
Power Supply Conduit Hole	1-1/8"	1-1/8"	1-1/8"	1-1/8"	1-1/8"	1-1/8"
Low-Voltage Conduit Hole	1/2"	1/2"	1/2"	1/2"	1/2"	1/2"
OPERATING WEIGHT (LBS)	526	536	568	569	609	629
SHIP WEIGHT (LBS)	553	564	599	597	638	655

[1] Wire size should be determined in accordance with National Electrical Codes. Extensive wire runs will require larger wire sizes.

[2] May use fuses or HACR-type circuit breakers of the same size as noted.

Note: Always check the S&R plate for electrical data on the unit being installed.

	DTG036 0453D***A*	DTG036 0903D***A*	DTG048 0903D***A*	DTG048 1153D***A*	DTG060 0903D***A*	DTG060 1403D***A*
COOLING CAPACITY						
Total BTU/h	36,000	36,000	47,000	47,000	60,000	60,000
Sensible BTU/h	25,740	25,740	33,605	33,605	42,900	42,900
SEER / EER	15.0/ 13.0	15.0/ 13.0	15.0/ 12.5	15.0/ 12.5	15.0/ 12.5	15.0/ 12.5
Decibels	78	78	78	78	78	78
ARI Reference #s	8965277	8965277	8965278	8965278	8965279	8965279
HEATING CAPACITY						
High Input / Output (kBTU/h)	46 / 37	92 / 74	92 / 74	115 / 92	92 / 74	138 / 110
Low Input / Output (kBTU/h)	NA	69 / 55	69 / 55	86 / 69	69 / 55	103 / 82
Annual Fuel Utilization Efficiency (%)	80.0	80.0	80.0	80.0	80.0	80.0
Temperature Rise Range (°F)	25-55	40-70 / 30-60	30-60 / 15-45	40-70 / 25-55	25-55 / 15-45	35-65 / 25-55
No. of Burners	2	4	4	5	4	6
EVAPORATOR MOTOR / COIL						
Motor Type	Direct	Direct	Direct	Direct	Direct	Direct
Wheel Dia. X Width	10 X 9	10 X 9	11 X 10	11 X 10	11 X 10	11 X 10
Indoor Nominal CFM	1,200	1,200	1,600	1,600	2,000	2,000
Motor Speed Tap (Cooling)	T3	T3	T3	T3	T3	T3
Motor Speed Tap (Heating)	T1	T5	T5	T5	T5	T5
Horsepower	0.5	0.5	1.0	1.0	1.0	1.0
Piston Size (Cooling)	0.068	0.068	0.076	0.076	0.086	0.086
Filter Size (")	14 X 20 X 2 (4)	14 X 20 X 2 (4)	14 X 20 X 2 (4)	14 X 20 X 2 (4)	16 X 20 X 2 (4)	16 X 20 X 2 (4)
Drain Size (NPT)	3/4	3/4	3/4	3/4	3/4	3/4
R-410A Refrigerant Charge (oz.)	105	105	105	105	153	153
Evaporator Coil Face Area (ft^2)	7.8	7.8	7.8	7.8	8.9	8.9
Rows Deep/ Fins per Inch	4 / 16	4 / 16	4 / 16	4 / 16	4 / 16	4 / 16
CONDENSER FAN / COIL						
Quantity of Condenser Fan Motors	1	1	1	1	1	1
Horsepower - RPM	1/4-1090	1/4-1090	1/4-1090	1/4-1090	1/3-1090	1/3-1090
Fan Diameter/ # Fan Blades	22 / 4	22 / 4	22 / 4	22 / 4	22 / 4	22 / 4
Outdoor Nominal CFM	3,800	3,800	3,800	3,800	4,200	4,200
Face Area (ft^2)	13.0	13.0	13.0	13.0	19.0	19.0
Rows Deep/ Fins per Inch	2 / 27	2 / 27	2 / 27	2 / 27	2 / 27	2 / 27
COMPRESSOR						
Quantity / Type (Single Stage)	1 / Scroll / Single	1 / Scroll / Single	1 / Scroll / Single	1 / Scroll / Single	1 / Scroll / Single	1 / Scroll / Single
Compressor RLA / LRA	9.0/71	9.0/71	13.1/83	13.1/83	15.9/110	15.9/110
ELECTRICAL DATA						
Voltage-Phase-Frequency	208/230-3-60	208/230-3-60	208/230-3-60	208/230-3-60	208/230-3-60	208/230-3-60
Indoor Blower HP / FLA	1/2 / 3.9	1/2 / 3.9	1 / 6.9	1 / 6.9	1 / 6.9	1 / 6.9
Max External Static (In. W.C.)	0.5	0.5	0.6	0.6	0.9	0.9
Outdoor Fan HP / FLA	¼ / 1.4	¼ / 1.4	¼ / 1.4	¼ / 1.4	1/3 / 2.0	1/3 / 2.0
Total Unit Amps	14.3	14.3	21.4	21.4	24.8	24.8
Min. Circuit Ampacity[1]	16.5 / 16.5	16.5 / 16.5	24.7 / 24.7	24.7 / 24.7	28.8 / 28.8	28.8 / 28.8
Max. Overcurrent Protection (amps)[2]	25 / 25	25 / 25	35 / 35	35 / 35	40 / 40	40 / 40
Power Supply Conduit Hole	1.125"	1.125"	1.125"	1.125"	1.125"	1.125"
Low-Voltage Conduit Hole	½"	½"	½"	½"	½"	½"
OPERATING WEIGHT (LBS)	526	536	568	569	609	629
SHIP WEIGHT (LBS)	553	564	599	597	638	655

[1] Wire size should be determined in accordance with National Electrical Codes. Extensive wire runs will require larger wire sizes.

[2] May use fuses or HACR-type circuit breakers of the same size as noted.

Note: Always check the S&R plate for electrical data on the unit being installed.

			OUTDOOR AMBIENT TEMPERATURE																							
			65				75				85				95				105				115			
			ENTERING INDOOR WET BULB TEMPERATURE																							
IDB	AIRFLOW		59	63	67	71	59	63	67	71	59	63	67	71	59	63	67	71	59	63	67	71	59	63	67	71
70	1350	MBh	34.7	36.0	39.4	-	33.9	35.1	38.5	-	33.1	34.3	37.6	-	32.3	33.4	36.6	-	30.7	31.8	34.8	-	28.4	29.4	32.2	-
		S/T	0.75	0.63	0.44	-	0.78	0.65	0.45	-	0.80	0.67	0.46	-	0.83	0.69	0.48	-	0.86	0.72	0.50	-	0.86	0.72	0.50	-
		ΔT	18	15	12	-	18	16	12	-	18	16	12	-	18	16	12	-	18	15	12	-	17	14	11	-
		kW	2.27	2.31	2.37	-	2.42	2.47	2.54	-	2.55	2.60	2.68	-	2.67	2.73	2.81	-	2.78	2.83	2.92	-	2.86	2.92	3.01	-
		HI PR	225	242	255	-	252	271	287	-	287	309	326	-	327	352	371	-	367	395	418	-	406	437	461	-
		LO PR	111	118	129	-	117	125	136	-	122	129	141	-	128	136	148	-	134	143	156	-	139	147	161	-
	1200	MBh	33.7	34.9	38.2	-	32.9	34.1	37.4	-	32.1	33.3	36.5	-	31.3	32.5	35.6	-	29.8	30.8	33.8	-	27.6	28.6	31.3	-
		S/T	0.72	0.60	0.42	-	0.74	0.62	0.43	-	0.76	0.64	0.44	-	0.79	0.66	0.46	-	0.82	0.68	0.47	-	0.82	0.69	0.48	-
		ΔT	19	16	12	-	19	16	12	-	19	16	12	-	19	16	12	-	19	16	12	-	17	15	11	-
		kW	2.25	2.29	2.36	-	2.40	2.45	2.52	-	2.54	2.59	2.66	-	2.65	2.71	2.79	-	2.75	2.81	2.89	-	2.84	2.90	2.99	-
		HI PR	222	239	253	-	250	269	284	-	284	306	323	-	323	348	368	-	364	392	413	-	402	433	457	-
		LO PR	110	117	127	-	116	123	135	-	120	128	140	-	127	135	147	-	133	141	154	-	137	146	159	-
	1050	MBh	31.1	32.2	35.3	-	30.4	31.5	34.5	-	29.6	30.7	33.7	-	28.9	30.0	32.8	-	27.5	28.5	31.2	-	25.4	26.4	28.9	-
		S/T	0.69	0.58	0.40	-	0.72	0.60	0.42	-	0.74	0.61	0.43	-	0.76	0.63	0.44	-	0.79	0.66	0.46	-	0.80	0.66	0.46	-
		ΔT	19	16	12	-	19	17	13	-	19	17	13	-	19	17	13	-	19	16	12	-	18	15	12	-
		kW	2.20	2.24	2.30	-	2.35	2.39	2.46	-	2.48	2.53	2.60	-	2.60	2.65	2.72	-	2.69	2.75	2.83	-	2.78	2.83	2.92	-
		HI PR	216	232	245	-	242	261	275	-	275	296	313	-	314	338	356	-	353	380	401	-	390	420	443	-
		LO PR	106	113	124	-	112	120	131	-	117	124	136	-	123	131	143	-	129	137	149	-	133	142	155	-
75	1350	MBh	35.3	36.3	39.3	42.2	34.5	35.5	38.4	41.2	33.6	34.6	37.5	40.2	32.8	**33.8**	36.6	39.3	31.2	32.1	34.7	37.3	28.9	29.7	32.2	34.5
		S/T	0.86	0.77	0.58	0.37	0.89	0.79	0.60	0.39	0.91	0.81	0.62	0.40	0.94	**0.84**	0.64	0.41	0.97	0.87	0.66	0.42	0.98	0.88	0.67	0.43
		ΔT	21	19	16	11	21	19	16	11	21	19	16	11	21	**19**	16	11	21	19	16	11	19	18	15	10
		kW	2.28	2.32	2.39	2.46	2.44	2.48	2.55	2.63	2.57	2.62	2.70	2.78	2.69	**2.75**	2.83	2.92	2.80	2.85	2.94	3.03	2.89	2.94	3.03	3.13
		HI PR	227	244	258	269	255	274	289	302	290	312	329	343	330	**355**	375	391	371	399	422	440	410	441	466	486
		LO PR	112	119	130	138	118	126	137	146	123	131	143	152	129	**137**	150	160	135	144	157	167	140	149	163	173
	1200	MBh	34.2	35.3	38.2	41.0	33.5	34.4	37.3	40.0	32.7	33.6	36.4	39.1	31.9	**32.8**	35.5	38.1	30.3	31.2	33.7	36.2	28.0	28.9	31.2	33.5
		S/T	0.82	0.73	0.55	0.36	0.85	0.76	0.57	0.37	0.87	0.78	0.59	0.38	0.90	**0.80**	0.61	0.39	0.93	0.83	0.63	0.40	0.94	0.84	0.63	0.41
		ΔT	21	20	16	11	22	20	16	11	22	20	16	11	22	**20**	16	11	22	20	16	11	20	19	15	10
		kW	2.27	2.31	2.37	2.44	2.42	2.47	2.54	2.61	2.55	2.60	2.68	2.76	2.67	**2.73**	2.81	2.89	2.78	2.83	2.92	3.01	2.86	2.92	3.01	3.10
		HI PR	225	242	255	266	252	271	287	299	287	309	326	340	327	**352**	371	387	368	396	418	436	406	437	461	481
		LO PR	111	118	129	137	117	125	136	145	122	129	141	151	128	**136**	149	158	134	143	156	166	139	147	161	171
	1050	MBh	31.6	32.5	35.2	37.8	30.9	31.8	34.4	36.9	30.1	31.0	33.6	36.1	29.4	**30.3**	32.8	35.2	27.9	28.8	31.1	33.4	25.9	26.6	28.8	31.0
		S/T	0.79	0.70	0.53	0.34	0.82	0.73	0.55	0.36	0.84	0.75	0.57	0.36	0.86	**0.77**	0.58	0.38	0.90	0.80	0.61	0.39	0.90	0.81	0.61	0.39
		ΔT	22	20	16	11	22	20	17	11	22	20	17	12	22	**20**	17	12	22	20	17	11	20	19	15	11
		kW	2.22	2.26	2.32	2.39	2.37	2.41	2.48	2.55	2.50	2.55	2.62	2.70	2.61	**2.67**	2.74	2.83	2.71	2.77	2.85	2.94	2.80	2.85	2.94	3.03
		HI PR	218	235	248	258	245	263	278	290	278	299	316	330	317	**341**	360	376	357	384	405	423	394	424	448	467
		LO PR	108	114	125	133	114	121	132	141	118	126	137	146	124	**132**	144	153	130	138	151	161	134	143	156	166

IDB = Entering Indoor Dry Bulb Temperature

Shaded area reflects ACCA (TVA) conditions

kW = Total system power

High & low pressures are measured at the liquid & suction service ports.

Amps: Unit amps (comp.+ evaporator + condenser fan motors)

Design Subcooling, 12±3 °F @ the liquid access fitting connection AHRI 95 test conditions. Design Superheat 8±3 °F @ the compressor suction access fitting connection.

			OUTDOOR AMBIENT TEMPERATURE																							
			65				75				85				95				105				115			
			ENTERING INDOOR WET BULB TEMPERATURE																							
IDB	AIRFLOW		59	63	67	71	59	63	67	71	59	63	67	71	59	63	67	71	59	63	67	71	59	63	67	71
80	1350	MBh	35.9	36.7	39.2	41.9	35.1	35.8	38.3	40.9	34.2	35.0	37.4	40.0	33.4	34.1	36.5	39.0	31.7	32.4	34.6	37.0	29.4	30.0	32.1	34.3
		S/T	0.94	0.88	0.72	0.5	1.00	0.91	0.74	0.6	1.00	0.94	0.76	0.6	1.00	0.97	0.79	0.6	1.00	1.00	0.82	0.6	1.00	1.00	0.82	0.6
		ΔT	23	22	19	15	24	22	19	15	23	22	19	15	23	22	20	16	22	22	19	15	20	20	18	14.4
		kW	2.30	2.34	2.41	2.5	2.45	2.50	2.57	2.6	2.59	2.64	2.72	2.8	2.71	2.77	2.85	2.9	2.82	2.88	2.96	3.1	2.91	2.97	3.06	3.2
		HI PR	229	247	261	272	257	277	292	305	293	315	333	347	333	359	379	395	375	404	426	444	414	446	471	491
		LO PR	113	120	131	140	119	127	139	148	124	132	144	154	130	139	152	161	137	145	159	169	141	150	164	175
	1200	MBh	34.9	35.6	38.1	40.7	34.0	34.8	37.2	39.7	33.2	34.0	36.3	38.8	32.4	33.1	**35.4**	37.8	30.8	31.5	33.6	36.0	28.5	29.2	31.2	33.3
		S/T	0.90	0.84	0.68	0.5	0.93	0.87	0.71	0.5	0.95	0.89	0.73	0.5	0.98	0.92	**0.75**	0.6	1.00	0.96	0.78	0.6	1.00	0.96	0.78	0.6
		ΔT	24	23	20	16	24	23	20	16	24	23	20	16	24	23	**20**	16	24	23	20	16	22	22	19	15.0
		kW	2.28	2.32	2.39	2.5	2.44	2.48	2.55	2.6	2.57	2.62	2.70	2.8	2.69	2.75	**2.83**	2.9	2.80	2.85	2.94	3.0	2.89	2.94	3.03	3.1
		HI PR	227	244	258	269	255	274	290	302	290	312	329	343	330	355	**375**	391	371	400	422	440	410	441	466	486
		LO PR	112	119	130	139	118	126	137	146	123	131	143	152	129	137	**150**	160	135	144	157	167	140	149	163	173
	1050	MBh	32.2	32.9	35.1	37.5	31.4	32.1	34.3	36.7	30.7	31.3	33.5	35.8	29.9	30.6	32.7	34.9	28.4	29.1	31.0	33.2	26.3	26.9	28.8	30.7
		S/T	0.86	0.81	0.66	0.5	0.90	0.84	0.68	0.5	0.92	0.86	0.70	0.5	0.95	0.89	0.72	0.5	0.98	0.92	0.75	0.6	0.99	0.93	0.76	0.6
		ΔT	24	23	20	16	25	24	21	16	25	24	21	16	25	24	21	17	24	23	20	16	23	22	19	15.2
		kW	2.23	2.27	2.34	2.4	2.38	2.43	2.50	2.6	2.52	2.57	2.64	2.7	2.63	2.69	2.77	2.8	2.73	2.79	2.87	3.0	2.82	2.88	2.96	3.1
		HI PR	220	237	250	261	247	266	281	293	281	302	319	333	320	344	364	379	360	388	409	427	398	428	452	472
		LO PR	109	116	126	134	115	122	133	142	119	127	139	148	125	133	146	155	131	140	152	162	136	144	158	168
85	1350	MBh	36.5	37.2	39.0	41.6	35.7	36.4	38.1	40.6	34.8	35.5	37.2	39.7	34.0	34.6	36.3	38.7	32.3	32.9	34.5	36.8	29.9	30.5	31.9	34.1
		S/T	0.98	0.95	0.86	0.7	1.00	0.98	0.89	0.7	1.00	1.00	0.91	0.7	1.00	1.00	0.94	0.8	1.00	1.00	0.98	0.8	1.00	1.00	0.98	0.8
		ΔT	24	24	23	20	24	24	23	20	24	24	23	20	23	24	23	20	22	22	23	20	20	21	21	18.5
		kW	2.31	2.36	2.42	2.5	2.47	2.52	2.59	2.7	2.61	2.66	2.74	2.8	2.74	2.79	2.87	3.0	2.84	2.90	2.99	3.1	2.93	2.99	3.08	3.2
		HI PR	232	249	263	275	260	280	295	308	296	318	336	350	337	362	383	399	379	408	430	449	418	450	475	496
		LO PR	114	122	133	141	121	128	140	149	125	133	146	155	132	140	153	163	138	147	160	171	143	152	166	177
	1200	MBh	35.5	36.2	37.9	40.4	34.6	35.3	37.0	39.5	33.8	34.5	36.1	38.5	33.0	33.6	35.2	37.6	31.3	31.9	33.5	35.7	29.0	29.6	31.0	33.1
		S/T	0.94	0.91	0.82	0.7	0.97	0.94	0.85	0.7	1.00	0.96	0.87	0.7	1.00	0.99	0.90	0.7	1.00	1.00	0.93	0.8	1.00	1.00	0.94	0.8
		ΔT	26	25	24	21	26	25	24	21	26	25	24	21	25	26	24	21	24	24	24	21	22	23	22	19.3
		kW	2.30	2.34	2.41	2.5	2.45	2.50	2.57	2.6	2.59	2.64	2.72	2.8	2.71	2.77	2.85	2.9	2.82	2.88	2.96	3.1	2.91	2.97	3.06	3.2
		HI PR	229	247	261	272	257	277	292	305	293	315	333	347	333	359	379	395	375	404	426	444	414	446	471	491
		LO PR	113	120	131	140	119	127	139	148	124	132	144	154	130	139	152	161	137	145	159	169	141	150	164	175
	1050	MBh	32.7	33.4	34.9	37.3	32.0	32.6	34.1	36.4	31.2	31.8	33.3	35.6	30.5	31.0	32.5	34.7	28.9	29.5	30.9	33.0	26.8	27.3	28.6	30.5
		S/T	0.91	0.87	0.79	0.6	0.94	0.91	0.82	0.7	0.96	0.93	0.84	0.7	0.99	0.96	0.86	0.7	1.00	0.99	0.90	0.7	1.00	1.00	0.91	0.7
		ΔT	26	26	24	21	26	26	24	21	26	26	24	21	26	26	25	21	25	26	24	21	23	24	23	19.6
		kW	2.25	2.29	2.35	2.4	2.40	2.45	2.52	2.6	2.54	2.58	2.66	2.7	2.65	2.71	2.79	2.9	2.75	2.81	2.89	3.0	2.84	2.90	2.99	3.1
		HI PR	222	239	253	264	250	269	284	296	284	305	323	336	323	348	367	383	364	391	413	431	402	432	457	476
		LO PR	110	117	127	136	116	123	135	143	120	128	140	149	127	135	147	157	133	141	154	164	137	146	159	170

IDB = Entering Indoor Dry Bulb Temperature

Shaded area reflects AHRI conditions

kW = Total system power

High & low pressures are measured at the liquid & suction service ports.

Amps: Unit amps (comp.+ evaporator + condenser fan motors)

Design Subcooling, 12±3 °F @ the liquid access fitting connection AHRI 95 test conditions. Design Superheat 8±3 °F @ the compressor suction access fitting connection.

			OUTDOOR AMBIENT TEMPERATURE																							
			65				75				85				95				105				115			
			ENTERING INDOOR WET BULB TEMPERATURE																							
IDB	AIRFLOW		59	63	67	71	59	63	67	71	59	63	67	71	59	63	67	71	59	63	67	71	59	63	67	71
70	1800	MBh	45.6	47.2	51.7	-	44.5	46.1	50.5	-	43.4	45.0	49.3	-	42.4	43.9	48.1	-	40.3	41.7	45.7	-	37.3	38.7	42.4	-
		S/T	0.75	0.63	0.44	-	0.78	0.65	0.45	-	0.80	0.67	0.46	-	0.83	0.69	0.48	-	0.86	0.72	0.50	-	0.86	0.72	0.50	-
		ΔT	18	15	12	-	18	15	12	-	18	15	12	-	18	15	12	-	18	15	12	-	16	14	11	-
		kW	3.06	3.12	3.21	-	3.28	3.35	3.45	-	3.48	3.55	3.66	-	3.65	3.73	3.84	-	3.80	3.88	4.00	-	3.92	4.01	4.14	-
		HI PR	234	252	266	-	262	282	298	-	298	321	339	-	340	366	386	-	382	411	434	-	422	454	480	-
		LO PR	111	118	129	-	117	125	136	-	122	129	141	-	128	136	148	-	134	143	156	-	139	147	161	-
	1600	MBh	44.2	45.9	50.2	-	43.2	44.8	49.1	-	42.2	43.7	47.9	-	41.2	42.7	46.7	-	39.1	40.5	44.4	-	36.2	37.5	41.1	-
		S/T	0.72	0.60	0.42	-	0.74	0.62	0.43	-	0.76	0.64	0.44	-	0.79	0.66	0.46	-	0.82	0.68	0.47	-	0.82	0.69	0.48	-
		ΔT	18	16	12	-	18	16	12	-	19	16	12	-	19	16	12	-	18	16	12	-	17	15	11	-
		kW	3.03	3.09	3.19	-	3.25	3.32	3.42	-	3.45	3.52	3.63	-	3.62	3.70	3.81	-	3.77	3.85	3.97	-	3.89	3.98	4.10	-
		HI PR	231	249	263	-	260	279	295	-	295	318	336	-	336	362	382	-	378	407	430	-	418	450	475	-
		LO PR	110	117	127	-	116	123	135	-	120	128	140	-	127	135	147	-	133	141	154	-	137	146	159	-
	1400	MBh	40.8	42.3	46.4	-	39.9	41.3	45.3	-	38.9	40.4	44.2	-	38.0	39.4	43.1	-	36.1	37.4	41.0	-	33.4	34.6	38.0	-
		S/T	0.69	0.58	0.40	-	0.72	0.60	0.42	-	0.74	0.61	0.43	-	0.76	0.63	0.44	-	0.79	0.66	0.46	-	0.80	0.66	0.46	-
		ΔT	19	16	12	-	19	16	12	-	19	16	12	-	19	16	12	-	19	16	12	-	17	15	11	-
		kW	2.96	3.02	3.11	-	3.18	3.24	3.34	-	3.37	3.44	3.54	-	3.53	3.61	3.72	-	3.68	3.75	3.87	-	3.80	3.88	4.00	-
		HI PR	224	242	255	-	252	271	286	-	286	308	326	-	326	351	371	-	367	395	417	-	406	436	461	-
		LO PR	106	113	124	-	112	120	131	-	117	124	136	-	123	131	143	-	129	137	149	-	133	142	155	-
75	1800	MBh	46.3	47.7	51.6	55.4	45.3	46.6	50.4	54.1	44.2	45.5	49.2	52.8	43.1	**44.4**	48.0	51.6	41.0	42.2	45.6	49.0	37.9	39.1	42.3	45.4
		S/T	0.86	0.77	0.58	0.37	0.89	0.79	0.60	0.39	0.91	0.81	0.62	0.40	0.94	**0.84**	0.64	0.41	0.97	0.87	0.66	0.42	0.98	0.88	0.67	0.43
		ΔT	20	19	15	11	21	19	15	11	21	19	15	11	21	**19**	16	11	20	19	15	11	19	18	14	10
		kW	3.08	3.14	3.24	3.33	3.30	3.37	3.48	3.58	3.50	3.58	3.69	3.80	3.68	**3.76**	3.87	4.00	3.83	3.91	4.03	4.16	3.96	4.04	4.17	4.31
		HI PR	236	254	268	280	265	285	301	314	301	324	342	357	343	**369**	390	407	386	415	439	458	427	459	485	506
		LO PR	112	119	130	138	118	126	137	146	123	131	143	152	129	**137**	150	160	135	144	157	167	140	149	163	173
	1600	MBh	45.0	46.3	50.1	53.8	43.9	45.2	49.0	52.6	42.9	44.2	47.8	51.3	41.9	**43.1**	46.6	50.1	39.8	40.9	44.3	47.6	36.8	37.9	41.0	44.0
		S/T	0.82	0.73	0.55	0.36	0.85	0.76	0.57	0.37	0.87	0.78	0.59	0.38	0.90	**0.80**	0.61	0.39	0.93	0.83	0.63	0.40	0.94	0.84	0.63	0.41
		ΔT	21	19	16	11	21	20	16	11	21	20	16	11	22	**20**	16	11	21	20	16	11	20	18	15	10
		kW	3.06	3.12	3.21	3.31	3.28	3.35	3.45	3.56	3.48	3.55	3.66	3.77	3.65	**3.73**	3.84	3.97	3.80	3.88	4.00	4.13	3.92	4.01	4.14	4.27
		HI PR	234	252	266	277	262	282	298	311	298	321	339	354	340	**366**	386	403	382	411	434	453	422	454	480	501
		LO PR	111	118	129	137	117	125	136	145	122	129	141	151	128	**136**	149	158	134	143	156	166	139	147	161	171
	1400	MBh	41.5	42.8	46.3	49.7	40.6	41.8	45.2	48.5	39.6	40.8	44.1	47.4	38.6	**39.8**	43.0	46.2	36.7	37.8	40.9	43.9	34.0	35.0	37.9	40.7
		S/T	0.79	0.70	0.53	0.34	0.82	0.73	0.55	0.36	0.84	0.75	0.57	0.36	0.86	**0.77**	0.58	0.38	0.90	0.80	0.61	0.39	0.90	0.81	0.61	0.39
		ΔT	21	20	16	11	22	20	16	11	22	20	16	11	22	**20**	17	11	22	20	16	11	20	19	15	11
		kW	2.99	3.05	3.14	3.23	3.20	3.27	3.37	3.47	3.39	3.46	3.57	3.68	3.56	**3.64**	3.75	3.87	3.71	3.78	3.90	4.03	3.83	3.91	4.04	4.17
		HI PR	227	244	258	269	254	274	289	302	289	311	329	343	330	**355**	375	391	371	399	421	439	410	441	466	486
		LO PR	108	114	125	133	114	121	132	141	118	126	137	146	124	**132**	144	153	130	138	151	161	134	143	156	166

IDB = Entering Indoor Dry Bulb Temperature

Shaded area reflects ACCA (TVA) conditions

kW = Total system power

High & low pressures are measured at the liquid & suction service ports.

Amps: Unit amps (comp.+ evaporator + condenser fan motors)

Design Subcooling, 12±3 °F @ the liquid access fitting connection AHRI 95 test conditions. Design Superheat 8±3 °F @ the compressor suction access fitting connection.

			OUTDOOR AMBIENT TEMPERATURE																							
			65				75				85				95				105				115			
			ENTERING INDOOR WET BULB TEMPERATURE																							
IDB	AIRFLOW		59	63	67	71	59	63	67	71	59	63	67	71	59	63	67	71	59	63	67	71	59	63	67	71
80	1800	MBh	47.2	48.2	51.5	55.0	46.1	47.1	50.3	53.8	45.0	46.0	49.1	52.5	43.9	44.8	47.9	51.2	41.7	42.6	45.5	48.6	38.6	39.5	42.1	45.1
		S/T	0.94	0.88	0.72	0.5	1.00	0.91	0.74	0.6	1.00	0.94	0.76	0.6	1.00	0.97	0.79	0.6	1.00	1.00	0.82	0.6	1.00	1.00	0.82	0.6
		ΔT	23	22	19	15	24	22	19	15	23	22	19	15	22	22	19	15	21	22	19	15	20	20	18	14.2
		kW	3.10	3.17	3.26	3.4	3.33	3.40	3.50	3.6	3.53	3.60	3.72	3.8	3.71	3.79	3.91	4.0	3.86	3.94	4.07	4.2	3.99	4.07	4.21	4.3
		HI PR	238	257	271	283	268	288	304	317	304	328	346	361	347	373	394	411	390	420	443	462	431	464	490	511
		LO PR	113	120	131	140	119	127	139	148	124	132	144	154	130	139	152	161	137	145	159	169	141	150	164	175
	1600	MBh	45.8	46.8	50.0	53.4	44.7	45.7	48.8	52.2	43.7	44.6	47.7	51.0	42.6	43.5	**46.5**	49.7	40.5	41.3	44.2	47.2	37.5	38.3	40.9	43.7
		S/T	0.90	0.84	0.68	0.5	0.93	0.87	0.71	0.5	0.95	0.89	0.73	0.5	0.98	0.92	**0.75**	0.6	1.00	0.96	0.78	0.6	1.00	0.96	0.78	0.6
		ΔT	24	23	20	16	24	23	20	16	24	23	20	16	24	23	**20**	16	23	23	20	16	22	21	18	14.7
		kW	3.08	3.14	3.24	3.3	3.30	3.37	3.48	3.6	3.50	3.58	3.69	3.8	3.68	3.76	**3.88**	4.0	3.83	3.91	4.03	4.2	3.96	4.04	4.17	4.3
		HI PR	236	254	268	280	265	285	301	314	301	324	342	357	343	369	**390**	407	386	415	439	458	427	459	485	506
		LO PR	112	119	130	139	118	126	137	146	123	131	143	152	129	137	**150**	160	135	144	157	167	140	149	163	173
	1400	MBh	42.3	43.2	46.1	49.3	41.3	42.2	45.1	48.2	40.3	41.2	44.0	47.0	39.3	40.2	42.9	45.9	37.3	38.2	40.8	43.6	34.6	35.4	37.8	40.4
		S/T	0.86	0.81	0.66	0.5	0.90	0.84	0.68	0.5	0.92	0.86	0.70	0.5	0.95	0.89	0.72	0.5	0.98	0.92	0.75	0.6	0.99	0.93	0.76	0.6
		ΔT	24	23	20	16	24	23	20	16	24	23	20	16	24	23	20	16	24	23	20	16	23	22	19	15.0
		kW	3.01	3.07	3.16	3.3	3.23	3.29	3.39	3.5	3.42	3.49	3.60	3.7	3.59	3.67	3.78	3.9	3.74	3.81	3.94	4.1	3.86	3.94	4.07	4.2
		HI PR	229	246	260	271	257	277	292	305	292	315	332	346	333	358	378	395	375	403	426	444	414	445	470	490
		LO PR	109	116	126	134	115	122	133	142	119	127	139	148	125	133	146	155	131	140	152	162	136	144	158	168
85	1800	MBh	48.0	48.9	51.2	54.7	46.9	47.8	50.0	53.4	45.8	46.6	48.8	52.1	44.6	45.5	47.7	50.8	42.4	43.2	45.3	48.3	39.3	40.0	41.9	44.7
		S/T	0.98	0.95	0.86	0.7	1.00	0.98	0.89	0.7	1.00	1.00	0.91	0.7	1.00	1.00	0.94	0.8	1.00	1.00	0.98	0.8	1.00	1.00	0.98	0.8
		ΔT	24	24	22	19	24	24	23	20	23	24	23	20	23	23	23	20	22	22	23	20	20	20	21	18.2
		kW	3.13	3.19	3.29	3.4	3.36	3.42	3.53	3.6	3.56	3.63	3.75	3.9	3.74	3.82	3.94	4.1	3.89	3.97	4.10	4.2	4.02	4.11	4.24	4.4
		HI PR	241	259	274	285	270	291	307	320	307	331	349	364	350	377	398	415	394	424	448	467	435	468	495	516
		LO PR	114	122	133	141	121	128	140	149	125	133	146	155	132	140	153	163	138	147	160	171	143	152	166	177
	1600	MBh	46.6	47.5	49.7	53.1	45.5	46.4	48.6	51.8	44.4	45.3	47.4	50.6	43.3	44.2	46.3	49.4	41.2	42.0	44.0	46.9	38.1	38.9	40.7	43.4
		S/T	0.94	0.91	0.82	0.7	0.97	0.94	0.85	0.7	1.00	0.96	0.87	0.7	1.00	0.99	0.90	0.7	1.00	1.00	0.93	0.8	1.00	1.00	0.94	0.8
		ΔT	25	25	23	20	25	25	24	20	25	25	24	20	25	25	24	21	24	24	24	20	22	22	22	19.0
		kW	3.10	3.17	3.26	3.4	3.33	3.40	3.50	3.6	3.53	3.60	3.72	3.8	3.71	3.79	3.91	4.0	3.86	3.94	4.07	4.2	3.99	4.07	4.21	4.3
		HI PR	238	257	271	283	268	288	304	317	304	328	346	361	347	373	394	411	390	420	443	462	431	464	490	511
		LO PR	113	120	131	140	119	127	139	148	124	132	144	154	130	139	152	161	137	145	159	169	141	150	164	175
	1400	MBh	43.0	43.8	45.9	49.0	42.0	42.8	44.8	47.8	41.0	41.8	43.8	46.7	40.0	40.8	42.7	45.6	38.0	38.7	40.6	43.3	35.2	35.9	37.6	40.1
		S/T	0.91	0.87	0.79	0.6	0.94	0.91	0.82	0.7	0.96	0.93	0.84	0.7	0.99	0.96	0.86	0.7	1.00	0.99	0.90	0.7	1.00	1.00	0.91	0.7
		ΔT	26	25	24	21	26	25	24	21	26	25	24	21	26	26	24	21	25	25	24	21	23	24	22	19.3
		kW	3.03	3.09	3.19	3.3	3.25	3.32	3.42	3.5	3.45	3.52	3.63	3.7	3.62	3.70	3.81	3.9	3.77	3.85	3.97	4.1	3.89	3.97	4.10	4.2
		HI PR	231	249	263	274	260	279	295	308	295	318	335	350	336	362	382	399	378	407	430	448	418	450	475	495
		LO PR	110	117	127	136	116	123	135	143	120	128	140	149	127	135	147	157	133	141	154	164	137	146	159	170

IDB = Entering Indoor Dry Bulb Temperature

Shaded area reflects AHRI conditions

kW = Total system power

High & low pressures are measured at the liquid & suction service ports.

Amps: Unit amps (comp.+ evaporator + condenser fan motors)

Design Subcooling, 12±3 °F @ the liquid access fitting connection AHRI 95 test conditions. Design Superheat 8±3 °F @ the compressor suction access fitting connection.

			OUTDOOR AMBIENT TEMPERATURE																							
			65				75				85				95				105				115			
			ENTERING INDOOR WET BULB TEMPERATURE																							
IDB	AIRFLOW		59	63	67	71	59	63	67	71	59	63	67	71	59	63	67	71	59	63	67	71	59	63	67	71
70	2300	MBh	58.3	60.4	66.2	-	56.9	59.0	64.7	-	55.6	57.6	63.1	-	54.2	56.2	61.6	-	51.5	53.4	58.5	-	47.7	49.5	54.2	-
		S/T	0.65	0.55	0.38	-	0.68	0.57	0.39	-	0.69	0.58	0.40	-	0.72	0.60	0.41	-	0.74	0.62	0.43	-	0.75	0.63	0.43	-
		ΔT	15	13	10	-	15	13	10	-	15	13	10	-	16	13	10	-	15	13	10	-	14	12	9	-
		kW	3.94	4.01	4.13	-	4.21	4.30	4.43	-	4.46	4.55	4.69	-	4.68	4.77	4.92	-	4.86	4.96	5.12	-	5.02	5.13	5.29	-
		HI PR	246	264	279	-	276	297	313	-	314	337	356	-	357	384	406	-	402	432	457	-	444	478	504	-
		LO PR	111	118	129	-	117	125	136	-	122	129	141	-	128	136	148	-	134	143	156	-	139	147	161	-
	2000	MBh	56.6	58.7	64.3	-	55.3	57.3	62.8	-	54.0	55.9	61.3	-	52.7	54.6	59.8	-	50.0	51.8	56.8	-	46.3	48.0	52.6	-
		S/T	0.62	0.52	0.36	-	0.65	0.54	0.37	-	0.66	0.55	0.38	-	0.68	0.57	0.40	-	0.71	0.59	0.41	-	0.71	0.60	0.41	-
		ΔT	16	14	11	-	16	14	11	-	16	14	11	-	17	14	11	-	16	14	11	-	15	13	10	-
		kW	3.91	3.98	4.10	-	4.18	4.27	4.39	-	4.43	4.52	4.65	-	4.64	4.74	4.88	-	4.82	4.92	5.08	-	4.98	5.09	5.25	-
		HI PR	243	262	276	-	273	294	310	-	310	334	353	-	354	381	402	-	398	428	452	-	440	473	499	-
		LO PR	110	117	127	-	116	123	135	-	120	128	140	-	127	135	147	-	133	141	154	-	137	146	159	-
	1700	MBh	52.2	54.2	59.3	-	51.0	52.9	58.0	-	49.8	51.6	56.6	-	48.6	50.4	55.2	-	46.2	47.9	52.4	-	42.8	44.3	48.6	-
		S/T	0.60	0.50	0.35	-	0.62	0.52	0.36	-	0.64	0.53	0.37	-	0.66	0.55	0.38	-	0.68	0.57	0.40	-	0.69	0.58	0.40	-
		ΔT	17	15	11	-	17	15	11	-	17	15	11	-	17	15	11	-	17	15	11	-	16	14	10	-
		kW	3.82	3.90	4.01	-	4.09	4.17	4.29	-	4.33	4.41	4.54	-	4.53	4.63	4.77	-	4.71	4.81	4.96	-	4.86	4.97	5.12	-
		HI PR	236	254	268	-	265	285	301	-	301	324	342	-	343	369	390	-	386	415	438	-	426	459	484	-
		LO PR	106	113	124	-	112	120	131	-	117	124	136	-	123	131	143	-	129	137	149	-	133	142	155	-
75	2300	MBh	59.3	61.0	66.1	70.9	57.9	59.6	64.5	69.3	56.5	58.2	63.0	67.6	55.2	**56.8**	61.5	66.0	52.4	53.9	58.4	62.7	48.5	50.0	54.1	58.1
		S/T	0.74	0.66	0.50	0.32	0.77	0.69	0.52	0.33	0.79	0.71	0.53	0.34	0.81	**0.73**	0.55	0.35	0.84	0.76	0.57	0.37	0.85	0.76	0.58	0.37
		ΔT	18	16	13	9	18	16	13	9	18	16	13	9	18	**17**	14	9	18	16	13	9	17	15	12	9
		kW	3.96	4.04	4.16	4.28	4.25	4.33	4.46	4.60	4.49	4.59	4.73	4.87	4.71	**4.81**	4.96	5.12	4.90	5.00	5.16	5.32	5.06	5.17	5.33	5.50
		HI PR	248	267	282	294	279	300	316	330	317	341	360	375	361	**388**	410	428	406	437	461	481	448	483	510	531
		LO PR	112	119	130	138	118	126	137	146	123	131	143	152	129	**137**	150	160	135	144	157	167	140	149	163	173
	2000	MBh	57.6	59.3	64.2	68.9	56.2	57.9	62.7	67.3	54.9	56.5	61.2	65.7	53.6	**55.1**	59.7	64.1	50.9	52.4	56.7	60.8	47.1	48.5	52.5	56.4
		S/T	0.71	0.63	0.48	0.31	0.73	0.66	0.50	0.32	0.75	0.67	0.51	0.33	0.78	**0.69**	0.53	0.34	0.81	0.72	0.55	0.35	0.81	0.73	0.55	0.35
		ΔT	19	17	14	10	19	17	14	10	19	17	14	10	19	**18**	14	10	19	17	14	10	18	16	13	9
		kW	3.94	4.01	4.13	4.25	4.21	4.30	4.43	4.56	4.46	4.55	4.69	4.83	4.68	**4.77**	4.92	5.08	4.86	4.96	5.12	5.28	5.02	5.13	5.29	5.46
		HI PR	246	264	279	291	276	297	313	327	314	337	356	372	357	**384**	406	423	402	432	457	476	444	478	505	526
		LO PR	111	118	129	137	117	125	136	145	122	129	141	151	128	**136**	149	158	134	143	156	166	139	147	161	171
	1700	MBh	53.1	54.7	59.2	63.6	51.9	53.4	57.8	62.1	50.7	52.2	56.5	60.6	49.4	**50.9**	55.1	59.1	47.0	48.3	52.3	56.2	43.5	44.8	48.5	52.0
		S/T	0.68	0.61	0.46	0.30	0.71	0.63	0.48	0.31	0.73	0.65	0.49	0.32	0.75	**0.67**	0.51	0.33	0.78	0.69	0.53	0.34	0.78	0.70	0.53	0.34
		ΔT	20	18	15	10	20	18	15	10	20	18	15	10	20	**18**	15	10	20	18	15	10	18	17	14	10
		kW	3.85	3.92	4.04	4.16	4.12	4.20	4.33	4.46	4.36	4.45	4.58	4.72	4.57	**4.66**	4.81	4.95	4.75	4.85	5.00	5.15	4.90	5.01	5.16	5.32
		HI PR	238	257	271	283	267	288	304	317	304	327	346	361	346	**373**	394	411	390	419	443	462	431	463	489	510
		LO PR	108	114	125	133	114	121	132	141	118	126	137	146	124	**132**	144	153	130	138	151	161	134	143	156	166

IDB = Entering Indoor Dry Bulb Temperature

Shaded area reflects ACCA (TVA) conditions

kW = Total system power

High & low pressures are measured at the liquid & suction service ports.

Amps: Unit amps (comp.+ evaporator + condenser fan motors)

Design Subcooling, 12±3 °F @ the liquid access fitting connection AHRI 95 test conditions. Design Superheat 8±3 °F @ the compressor suction access fitting connection.

			Outdoor Ambient Temperature																							
			65				75				85				95				105				115			
			Entering Indoor Wet Bulb Temperature																							
IDB	Airflow		59	63	67	71	59	63	67	71	59	63	67	71	59	63	67	71	59	63	67	71	59	63	67	71
80	2300	MBh	60.3	61.7	65.9	70.4	58.9	60.2	64.3	68.8	57.5	58.8	62.8	67.2	56.1	57.4	61.3	65.5	53.3	54.5	58.2	62.2	49.4	50.5	53.9	57.7
		S/T	0.81	0.76	0.62	0.5	0.84	0.79	0.64	0.5	0.86	0.81	0.66	0.5	0.89	0.84	0.68	0.5	0.93	0.87	0.71	0.5	0.93	0.88	0.71	0.5
		ΔT	20	19	16	13	20	19	17	13	20	19	17	13	20	19	17	13	20	19	16	13	18	18	15	12.3
		kW	3.99	4.07	4.19	4.3	4.28	4.36	4.49	4.6	4.53	4.62	4.76	4.9	4.75	4.85	5.00	5.2	4.94	5.04	5.20	5.4	5.10	5.21	5.37	5.5
		HI PR	251	270	285	297	281	303	320	333	320	344	364	379	364	392	414	432	410	441	466	486	453	487	515	537
		LO PR	113	120	131	140	119	127	139	148	124	132	144	154	130	139	152	161	137	145	159	169	141	150	164	175
	2000	MBh	58.6	59.9	64.0	68.4	57.2	58.5	62.5	66.8	55.9	57.1	61.0	65.2	54.5	55.7	**59.5**	63.6	51.8	52.9	56.5	60.4	48.0	49.0	52.4	56.0
		S/T	0.78	0.73	0.59	0.4	0.80	0.75	0.61	0.5	0.82	0.77	0.63	0.5	0.85	0.80	**0.65**	0.5	0.88	0.83	0.67	0.5	0.89	0.84	0.68	0.5
		ΔT	21	20	17	14	21	20	18	14	21	20	18	14	21	20	**18**	14	21	20	18	14	20	19	16	13.1
		kW	3.97	4.04	4.16	4.3	4.25	4.33	4.46	4.6	4.50	4.59	4.73	4.9	4.71	4.81	**4.96**	5.1	4.90	5.00	5.16	5.3	5.06	5.17	5.33	5.5
		HI PR	248	267	282	294	279	300	317	330	317	341	360	375	361	388	**410**	428	406	437	461	481	448	483	510	532
		LO PR	112	119	130	139	118	126	137	146	123	131	143	152	129	137	**150**	160	135	144	157	167	140	149	163	173
	1700	MBh	54.1	55.3	59.0	63.1	52.8	54.0	57.7	61.6	51.6	52.7	56.3	60.2	50.3	51.4	54.9	58.7	47.8	48.8	52.2	55.8	44.3	45.2	48.3	51.7
		S/T	0.75	0.70	0.57	0.4	0.78	0.73	0.59	0.4	0.80	0.75	0.61	0.5	0.82	0.77	0.63	0.5	0.85	0.80	0.65	0.5	0.86	0.81	0.66	0.5
		ΔT	22	21	18	15	22	21	18	15	22	21	18	15	22	21	19	15	22	21	18	15	21	20	17	13.7
		kW	3.88	3.95	4.07	4.2	4.15	4.23	4.36	4.5	4.39	4.48	4.62	4.8	4.60	4.70	4.84	5.0	4.79	4.88	5.04	5.2	4.94	5.04	5.20	5.4
		HI PR	241	259	274	285	270	291	307	320	307	331	349	364	350	377	398	415	394	424	447	467	435	468	494	516
		LO PR	109	116	126	134	115	122	133	142	119	127	139	148	125	133	146	155	131	140	152	162	136	144	158	168
85	2300	MBh	61.4	62.6	65.6	69.9	60.0	61.1	64.0	68.3	58.5	59.7	62.5	66.7	57.1	58.2	61.0	65.1	54.3	55.3	57.9	61.8	50.3	51.2	53.7	57.2
		S/T	0.85	0.82	0.74	0.6	0.88	0.85	0.77	0.6	0.91	0.88	0.79	0.6	0.94	0.90	0.82	0.7	0.97	0.94	0.85	0.7	0.98	0.95	0.85	0.7
		ΔT	21	21	19	17	21	21	20	17	21	21	20	17	21	21	20	17	21	21	20	17	20	19	18	15.8
		kW	4.02	4.10	4.22	4.3	4.31	4.40	4.53	4.7	4.56	4.66	4.80	4.9	4.79	4.89	5.04	5.2	4.98	5.08	5.24	5.4	5.14	5.25	5.42	5.6
		HI PR	253	272	288	300	284	306	323	337	323	348	367	383	368	396	418	436	414	446	471	491	457	492	520	542
		LO PR	114	122	133	141	121	128	140	149	125	133	146	155	132	140	153	163	138	147	160	171	143	152	166	177
	2000	MBh	59.6	60.8	63.6	67.9	58.2	59.4	62.2	66.3	56.8	57.9	60.7	64.7	55.5	56.5	59.2	63.2	52.7	53.7	56.2	60.0	48.8	49.7	52.1	55.6
		S/T	0.81	0.79	0.71	0.6	0.84	0.81	0.73	0.6	0.86	0.83	0.75	0.6	0.89	0.86	0.78	0.6	0.93	0.89	0.81	0.7	0.93	0.90	0.81	0.7
		ΔT	22	22	21	18	23	22	21	18	23	22	21	18	23	22	21	18	22	22	21	18	21	21	19	16.9
		kW	3.99	4.07	4.19	4.3	4.28	4.36	4.49	4.6	4.53	4.62	4.76	4.9	4.75	4.85	5.00	5.2	4.94	5.04	5.20	5.4	5.10	5.21	5.37	5.5
		HI PR	251	270	285	297	281	303	320	333	320	344	364	379	364	392	414	432	410	441	466	486	453	487	515	537
		LO PR	113	120	131	140	119	127	139	148	124	132	144	154	130	139	152	161	137	145	159	169	141	150	164	175
	1700	MBh	55.0	56.1	58.7	62.7	53.7	54.8	57.4	61.2	52.5	53.5	56.0	59.8	51.2	52.2	54.6	58.3	48.6	49.6	51.9	55.4	45.0	45.9	48.1	51.3
		S/T	0.78	0.76	0.68	0.6	0.81	0.78	0.71	0.6	0.83	0.80	0.73	0.6	0.86	0.83	0.75	0.6	0.89	0.86	0.78	0.6	0.90	0.87	0.78	0.6
		ΔT	23	23	22	19	24	23	22	19	24	23	22	19	24	23	22	19	23	23	22	19	22	22	20	17.7
		kW	3.91	3.98	4.10	4.2	4.18	4.27	4.39	4.5	4.43	4.52	4.65	4.8	4.64	4.74	4.88	5.0	4.82	4.92	5.08	5.2	4.98	5.08	5.24	5.4
		HI PR	243	262	276	288	273	294	310	323	310	334	353	368	353	380	402	419	398	428	452	471	439	473	499	521
		LO PR	110	117	127	136	116	123	135	143	120	128	140	149	127	135	147	157	133	141	154	164	137	146	159	170

IDB = Entering Indoor Dry Bulb Temperature

Shaded area reflects AHRI conditions

kW = Total system power

High & low pressures are measured at the liquid & suction service ports.

Amps: Unit amps (comp.+ evaporator + condenser fan motors)

Design Subcooling, 12±3 °F @ the liquid access fitting connection AHRI 95 test conditions. Design Superheat 8±3 °F @ the compressor suction access fitting connection.

			OUTDOOR AMBIENT TEMPERATURE																							
			65				75				85				95				105				115			
			ENTERING INDOOR WET BULB TEMPERATURE																							
IDB	AIRFLOW		59	63	67	71	59	63	67	71	59	63	67	71	59	63	67	71	59	63	67	71	59	63	67	71
70	1347	MBh	35.1	36.4	39.9	-	34.3	35.6	39.0	-	33.5	34.7	38.0	-	32.7	33.9	37.1	-	31.0	32.2	35.2	-	28.7	29.8	32.6	-
		S/T	0.74	0.62	0.43	-	0.77	0.64	0.45	-	0.79	0.66	0.46	-	0.82	0.68	0.47	-	0.85	0.71	0.49	-	0.85	0.71	0.49	-
		Delta T	18	15	12	-	18	16	12	-	18	16	12	-	18	16	12	-	18	16	12	-	17	14	11	-
		KW	2.16	2.20	2.27	-	2.31	2.36	2.43	-	2.45	2.50	2.58	-	2.57	2.62	2.70	-	2.67	2.73	2.81	-	2.76	2.82	2.91	-
		AMPS	7.3	7.4	7.6	-	7.8	7.9	8.1	-	8.3	8.5	8.7	-	8.8	8.9	9.2	-	9.2	9.4	9.7	-	9.7	9.9	10.1	-
		HI PR	221	237	251	-	247	266	281	-	281	303	320	-	321	345	364	-	361	388	410	-	398	429	453	-
		LO PR	115	123	134	-	122	130	141	-	127	135	147	-	133	141	154	-	139	148	162	-	144	153	167	-
	1199	MBh	34.1	35.3	38.7	-	33.3	34.5	37.8	-	32.5	33.7	36.9	-	31.7	32.9	36.0	-	30.1	31.2	34.2	-	27.9	28.9	31.7	-
		S/T	0.71	0.59	0.41	-	0.73	0.61	0.43	-	0.75	0.63	0.44	-	0.78	0.65	0.45	-	0.81	0.67	0.47	-	0.81	0.68	0.47	-
		Delta T	19	16	12	-	19	16	12	-	19	16	12	-	19	16	12	-	19	16	12	-	17	15	11	-
		KW	2.14	2.19	2.25	-	2.30	2.34	2.41	-	2.43	2.48	2.56	-	2.55	2.60	2.68	-	2.65	2.71	2.79	-	2.74	2.79	2.88	-
		AMPS	7.3	7.4	7.6	-	7.7	7.9	8.1	-	8.2	8.4	8.6	-	8.7	8.9	9.1	-	9.1	9.3	9.6	-	9.6	9.8	10.1	-
		HI PR	218	235	248	-	245	264	278	-	279	300	317	-	317	342	361	-	357	384	406	-	394	425	448	-
		LO PR	114	121	133	-	121	128	140	-	125	133	146	-	132	140	153	-	138	147	160	-	143	152	166	-
	1062	MBh	32.4	33.6	36.8	-	31.6	32.8	35.9	-	30.9	32.0	35.1	-	30.1	31.2	34.2	-	28.6	29.7	32.5	-	26.5	27.5	30.1	-
		S/T	0.68	0.57	0.39	-	0.70	0.59	0.41	-	0.72	0.60	0.42	-	0.74	0.62	0.43	-	0.77	0.65	0.45	-	0.78	0.65	0.45	-
		Delta T	19	16	13	-	19	17	13	-	19	17	13	-	19	17	13	-	19	17	13	-	18	15	12	-
		KW	2.11	2.15	2.22	-	2.26	2.31	2.37	-	2.39	2.44	2.52	-	2.51	2.56	2.64	-	2.61	2.66	2.75	-	2.69	2.75	2.84	-
		AMPS	7.2	7.3	7.5	-	7.6	7.7	7.9	-	8.1	8.3	8.5	-	8.6	8.7	9.0	-	9.0	9.2	9.4	-	9.4	9.6	9.9	-
		HI PR	214	230	243	-	240	258	273	-	273	294	310	-	311	335	353	-	350	377	398	-	387	416	439	-
		LO PR	112	119	130	-	118	126	137	-	123	131	143	-	129	137	150	-	135	144	157	-	140	149	162	-
75	1347	MBh	35.7	36.8	39.8	42.7	34.9	35.9	38.9	41.7	34.1	35.1	37.9	40.7	33.2	**34.2**	37.0	39.7	31.6	32.5	35.2	37.7	29.2	30.1	32.6	35.0
		S/T	0.84	0.76	0.57	0.37	0.88	0.78	0.59	0.38	0.90	0.80	0.61	0.39	0.93	**0.83**	0.63	0.40	0.96	0.86	0.65	0.42	0.97	0.87	0.66	0.42
		Delta T	21	19	16	11	21	19	16	11	21	19	16	11	21	**19**	16	11	21	19	16	11	19	18	15	10
		KW	2.18	2.22	2.28	2.35	2.33	2.38	2.45	2.52	2.47	2.52	2.60	2.68	2.59	**2.64**	2.72	2.81	2.69	2.75	2.83	2.93	2.78	2.84	2.93	3.02
		AMPS	7.4	7.5	7.7	7.9	7.8	8.0	8.2	8.4	8.4	8.5	8.7	9.0	8.8	**9.0**	9.2	9.5	9.3	9.5	9.7	10.0	9.7	9.9	10.2	10.5
		HI PR	223	240	253	264	250	269	284	296	284	306	323	337	324	**348**	368	384	364	392	414	432	402	433	457	477
		LO PR	116	124	135	144	123	131	143	152	128	136	148	158	134	**143**	156	166	141	150	163	174	146	155	169	180
	1199	MBh	34.7	35.7	38.6	41.5	33.9	34.9	37.7	40.5	33.1	34.0	36.8	39.5	32.3	**33.2**	35.9	38.6	30.6	31.5	34.1	36.6	28.4	29.2	31.6	33.9
		S/T	0.81	0.72	0.55	0.35	0.84	0.75	0.57	0.36	0.86	0.77	0.58	0.37	0.88	**0.79**	0.60	0.38	0.92	0.82	0.62	0.40	0.93	0.83	0.63	0.40
		Delta T	21	20	16	11	22	20	16	11	22	20	16	11	22	**20**	16	11	22	20	16	11	20	19	15	10
		KW	2.16	2.20	2.27	2.33	2.31	2.36	2.43	2.50	2.45	2.50	2.58	2.66	2.57	**2.62**	2.70	2.79	2.67	2.73	2.81	2.90	2.76	2.82	2.91	3.00
		AMPS	7.3	7.4	7.6	7.9	7.8	7.9	8.1	8.4	8.3	8.5	8.7	8.9	8.8	**8.9**	9.2	9.5	9.2	9.4	9.7	10.0	9.7	9.9	10.1	10.5
		HI PR	221	237	251	261	248	266	281	293	281	303	320	334	321	**345**	364	380	361	388	410	427	399	429	453	472
		LO PR	115	123	134	143	122	130	141	151	127	135	147	157	133	**141**	154	164	139	148	162	172	144	153	167	178
	1062	MBh	32.9	33.9	36.7	39.4	32.2	33.1	35.9	38.5	31.4	32.3	35.0	37.6	30.6	**31.5**	34.1	36.6	29.1	30.0	32.4	34.8	27.0	27.8	30.0	32.3
		S/T	0.77	0.69	0.52	0.34	0.80	0.72	0.54	0.35	0.82	0.73	0.56	0.36	0.85	**0.76**	0.57	0.37	0.88	0.79	0.59	0.38	0.89	0.79	0.60	0.39
		Delta T	22	20	17	11	22	21	17	12	22	21	17	12	22	**21**	17	12	22	20	17	12	21	19	16	11
		KW	2.13	2.17	2.23	2.30	2.28	2.32	2.39	2.47	2.41	2.46	2.54	2.61	2.53	**2.58**	2.66	2.74	2.63	2.68	2.77	2.86	2.72	2.77	2.86	2.95
		AMPS	7.2	7.3	7.5	7.7	7.7	7.8	8.0	8.2	8.2	8.3	8.6	8.8	8.6	**8.8**	9.0	9.3	9.1	9.3	9.5	9.8	9.5	9.7	10.0	10.3
		HI PR	216	233	246	256	243	261	276	287	276	297	313	327	314	**338**	357	372	353	380	402	419	391	420	444	463
		LO PR	113	120	131	140	119	127	139	148	124	132	144	153	130	**139**	151	161	137	145	159	169	141	150	164	175

IDB = Entering Indoor Dry Bulb Temperature

Shaded area reflects ACCA (TVA) conditions

kW = Total system power

High & low pressures are measured at the liquid & suction service ports.

Amps: Unit amps (comp.+ evaporator + condenser fan motors)

Design Subcooling, 12±3 °F @ the liquid access fitting connection AHRI 95 test conditions. Design Superheat 8±3 °F @ the compressor suction access fitting connection.

			OUTDOOR AMBIENT TEMPERATURE																							
			65				75				85				95				105				115			
			ENTERING INDOOR WET BULB TEMPERATURE																							
IDB	AIRFLOW		59	63	67	71	59	63	67	71	59	63	67	71	59	63	67	71	59	63	67	71	59	63	67	71
80	1347	MBh	36.3	37.1	39.7	42.4	35.5	36.3	38.8	41.4	34.7	35.4	37.8	40.4	33.8	34.5	36.9	39.5	32.1	32.8	35.1	37.5	29.8	30.4	32.5	34.7
		S/T	0.93	0.87	0.71	0.53	0.96	0.90	0.73	0.55	1.00	0.92	0.75	0.56	1.00	0.95	0.78	0.58	1.00	1.00	0.81	0.60	1.00	1.00	0.81	0.61
		Delta T	23	22	19	15	23	22	19	15	24	22	19	16	23	22	20	16	22	22	19	15	20	21	18	14
		KW	2.19	2.23	2.30	2.37	2.35	2.40	2.47	2.54	2.49	2.54	2.62	2.70	2.61	2.66	2.75	2.83	2.71	2.77	2.86	2.95	2.80	2.86	2.95	3.05
		AMPS	7.4	7.6	7.7	8.0	7.9	8.0	8.2	8.5	8.4	8.6	8.8	9.1	8.9	9.1	9.3	9.6	9.4	9.5	9.8	10.1	9.8	10.0	10.3	10.6
		HI PR	225	242	256	267	253	272	287	299	287	309	326	340	327	352	372	388	368	396	418	436	407	438	462	482
		LO PR	118	125	137	145	124	132	144	154	129	137	150	160	136	144	158	168	142	151	165	176	147	156	171	182
	1199	MBh	35.3	36.1	38.5	41.2	34.5	35.2	37.6	40.2	33.6	34.4	36.7	39.3	32.8	33.5	**35.8**	38.3	31.2	31.9	34.0	36.4	28.9	29.5	31.5	33.7
		S/T	0.88	0.83	0.67	0.50	0.92	0.86	0.70	0.52	0.94	0.88	0.72	0.54	0.97	0.91	**0.74**	0.55	1.00	0.94	0.77	0.57	1.00	0.95	0.77	0.58
		Delta T	24	23	20	16	24	23	20	16	24	23	20	16	24	23	**20**	16	24	23	20	16	22	22	19	15
		KW	2.18	2.22	2.28	2.35	2.33	2.38	2.45	2.52	2.47	2.52	2.60	2.68	2.59	2.64	**2.73**	2.81	2.69	2.75	2.83	2.93	2.78	2.84	2.93	3.02
		AMPS	7.4	7.5	7.7	7.9	7.8	8.0	8.2	8.4	8.4	8.5	8.8	9.0	8.8	9.0	**9.2**	9.5	9.3	9.5	9.7	10.0	9.7	9.9	10.2	10.5
		HI PR	223	240	253	264	250	269	284	296	284	306	323	337	324	348	**368**	384	364	392	414	432	403	433	457	477
		LO PR	116	124	135	144	123	131	143	152	128	136	149	158	134	143	**156**	166	141	150	163	174	146	155	169	180
	1062	MBh	33.5	34.3	36.6	39.1	32.7	33.5	35.7	38.2	32.0	32.7	34.9	37.3	31.2	31.9	34.0	36.4	29.6	30.3	32.3	34.6	27.4	28.0	30.0	32.0
		S/T	0.85	0.79	0.65	0.48	0.88	0.82	0.67	0.50	0.90	0.84	0.69	0.51	0.93	0.87	0.71	0.53	0.96	0.90	0.74	0.55	0.97	0.91	0.74	0.55
		Delta T	25	24	20	16	25	24	21	17	25	24	21	17	25	24	21	17	25	24	21	16	23	22	19	15
		KW	2.14	2.19	2.25	2.32	2.30	2.34	2.41	2.49	2.43	2.48	2.56	2.63	2.55	2.60	2.68	2.77	2.65	2.71	2.79	2.88	2.74	2.79	2.88	2.97
		AMPS	7.3	7.4	7.6	7.8	7.7	7.9	8.1	8.3	8.2	8.4	8.6	8.9	8.7	8.9	9.1	9.4	9.1	9.3	9.6	9.9	9.6	9.8	10.1	10.4
		HI PR	218	235	248	259	245	264	278	290	279	300	317	330	317	342	361	376	357	384	406	423	394	425	448	468
		LO PR	114	121	133	141	121	128	140	149	125	133	146	155	132	140	153	163	138	147	160	171	143	152	166	176
85	1347	MBh	37.0	37.7	39.5	42.1	36.1	36.8	38.6	41.1	35.3	35.9	37.6	40.2	34.4	35.1	36.7	39.2	32.7	33.3	34.9	37.2	30.3	30.9	32.3	34.5
		S/T	0.97	0.94	0.85	0.69	1.00	0.97	0.88	0.71	1.00	1.00	0.90	0.73	1.00	1.00	0.93	0.75	1.00	1.00	0.96	0.78	1.00	1.00	0.97	0.79
		Delta T	25	24	23	20	25	24	23	20	24	24	23	20	23	24	23	20	22	23	23	20	21	21	21	19
		KW	2.21	2.25	2.32	2.39	2.37	2.41	2.49	2.56	2.51	2.56	2.64	2.72	2.63	2.68	2.77	2.86	2.73	2.79	2.88	2.97	2.83	2.89	2.98	3.07
		AMPS	7.5	7.6	7.8	8.0	7.9	8.1	8.3	8.6	8.5	8.6	8.9	9.2	9.0	9.1	9.4	9.7	9.4	9.6	9.9	10.2	9.9	10.1	10.4	10.7
		HI PR	227	245	258	269	255	274	290	302	290	312	330	344	330	356	375	392	372	400	422	440	411	442	467	487
		LO PR	119	126	138	147	126	134	146	155	130	139	151	161	137	146	159	169	144	153	167	178	149	158	173	184
	1199	MBh	35.9	36.6	38.3	40.9	35.1	35.7	37.4	39.9	34.2	34.9	36.5	39.0	33.4	34.0	35.7	38.0	31.7	32.3	33.9	36.1	29.4	30.0	31.4	33.5
		S/T	0.93	0.89	0.81	0.65	0.96	0.93	0.84	0.68	0.98	0.95	0.86	0.70	1.00	0.98	0.89	0.72	1.00	1.00	0.92	0.75	1.00	1.00	0.93	0.75
		Delta T	26	25	24	21	26	25	24	21	26	25	24	21	26	26	24	21	24	25	24	21	23	23	22	19
		KW	2.19	2.23	2.30	2.37	2.35	2.40	2.47	2.54	2.49	2.54	2.62	2.70	2.61	2.66	2.75	2.83	2.71	2.77	2.86	2.95	2.80	2.86	2.95	3.05
		AMPS	7.4	7.6	7.7	8.0	7.9	8.0	8.2	8.5	8.4	8.6	8.8	9.1	8.9	9.1	9.3	9.6	9.4	9.5	9.8	10.1	9.8	10.0	10.3	10.6
		HI PR	225	242	256	267	253	272	287	299	287	309	326	340	327	352	372	388	368	396	418	436	407	438	462	482
		LO PR	118	125	137	145	124	132	144	154	129	137	150	160	136	144	158	168	142	151	165	176	147	156	171	182
	1062	MBh	34.1	34.8	36.4	38.8	33.3	34.0	35.6	37.9	32.5	33.2	34.7	37.0	31.7	32.3	33.9	36.1	30.1	30.7	32.2	34.3	27.9	28.5	29.8	31.8
		S/T	0.89	0.86	0.77	0.63	0.92	0.89	0.80	0.65	0.94	0.91	0.82	0.67	0.97	0.94	0.85	0.69	1.00	0.97	0.88	0.71	1.00	0.98	0.89	0.72
		Delta T	26	26	24	21	27	26	25	21	27	26	25	21	27	26	25	22	26	26	25	21	24	24	23	20
		KW	2.16	2.20	2.27	2.33	2.31	2.36	2.43	2.50	2.45	2.50	2.58	2.66	2.57	2.62	2.70	2.79	2.67	2.73	2.81	2.90	2.76	2.82	2.91	3.00
		AMPS	7.3	7.4	7.6	7.9	7.8	7.9	8.1	8.4	8.3	8.5	8.7	8.9	8.8	8.9	9.2	9.5	9.2	9.4	9.7	10.0	9.7	9.9	10.1	10.5
		HI PR	221	237	251	261	247	266	281	293	281	303	320	334	321	345	364	380	361	388	410	427	398	429	453	472
		LO PR	115	123	134	143	122	130	141	151	127	135	147	157	133	141	154	164	139	148	162	172	144	153	167	178

IDB = Entering Indoor Dry Bulb Temperature

Shaded area reflects AHRI conditions

kW = Total system power

High & low pressures are measured at the liquid & suction service ports.

Amps: Unit amps (comp.+ evaporator + condenser fan motors)

Design Subcooling, 12±3 °F @ the liquid access fitting connection AHRI 95 test conditions. Design Superheat 8±3 °F @ the compressor suction access fitting connection.

			OUTDOOR AMBIENT TEMPERATURE																							
			65				75				85				95				105				115			
			ENTERING INDOOR WET BULB TEMPERATURE																							
IDB	AIRFLOW		59	63	67	71	59	63	67	71	59	63	67	71	59	63	67	71	59	63	67	71	59	63	67	71
70	1796	MBh	46.4	48.1	52.7	-	45.3	47.0	51.4	-	44.2	45.8	50.2	-	43.1	44.7	49.0	-	41.0	42.5	46.5	-	38.0	39.4	43.1	-
		S/T	0.77	0.65	0.45	-	0.80	0.67	0.46	-	0.82	0.69	0.48	-	0.85	0.71	0.49	-	0.88	0.74	0.51	-	0.89	0.74	0.51	-
		Delta T	18	16	12	-	19	16	12	-	19	16	12	-	19	16	12	-	18	16	12	-	17	15	11	-
		KW	2.94	3.00	3.09	-	3.16	3.23	3.33	-	3.36	3.43	3.54	-	3.53	3.61	3.73	-	3.68	3.76	3.89	-	3.81	3.89	4.02	-
		AMPS	9.4	9.6	9.8	-	10.0	10.2	10.5	-	10.7	10.9	11.2	-	11.3	11.5	11.9	-	11.9	12.2	12.5	-	12.5	12.8	13.1	-
		HI PR	236	254	268	-	265	285	301	-	301	324	342	-	343	369	390	-	386	415	439	-	427	459	485	-
		LO PR	112	119	130	-	119	126	138	-	123	131	143	-	130	138	150	-	136	144	158	-	140	149	163	-
	1538	MBh	45.0	46.7	51.1	-	44.0	45.6	49.9	-	42.9	44.5	48.8	-	41.9	43.4	47.6	-	39.8	41.2	45.2	-	36.9	38.2	41.9	-
		S/T	0.74	0.62	0.43	-	0.76	0.64	0.44	-	0.78	0.65	0.45	-	0.81	0.68	0.47	-	0.84	0.70	0.49	-	0.85	0.71	0.49	-
		Delta T	20	17	13	-	20	17	13	-	20	17	13	-	20	18	13	-	20	17	13	-	19	16	12	-
		KW	2.92	2.98	3.07	-	3.14	3.20	3.31	-	3.33	3.41	3.51	-	3.51	3.58	3.70	-	3.65	3.73	3.85	-	3.78	3.86	3.99	-
		AMPS	9.3	9.5	9.8	-	9.9	10.1	10.4	-	10.6	10.8	11.1	-	11.2	11.4	11.8	-	11.8	12.1	12.4	-	12.4	12.7	13.0	-
		HI PR	234	252	266	-	262	282	298	-	298	321	339	-	340	366	386	-	382	411	434	-	422	455	480	-
		LO PR	111	118	129	-	117	125	136	-	122	130	142	-	128	136	149	-	134	143	156	-	139	148	161	-
	1416	MBh	44.4	46.0	50.4	-	43.3	44.9	49.2	-	42.3	43.8	48.0	-	41.3	42.8	46.9	-	39.2	40.6	44.5	-	36.3	37.6	41.2	-
		S/T	0.71	0.59	0.41	-	0.74	0.62	0.43	-	0.76	0.63	0.44	-	0.78	0.65	0.45	-	0.81	0.68	0.47	-	0.82	0.68	0.47	-
		Delta T	20	18	13	-	21	18	14	-	21	18	14	-	21	18	14	-	21	18	14	-	19	17	13	-
		KW	2.88	2.94	3.03	-	3.10	3.16	3.26	-	3.29	3.36	3.47	-	3.46	3.53	3.65	-	3.60	3.68	3.80	-	3.72	3.81	3.93	-
		AMPS	9.2	9.4	9.6	-	9.8	10.0	10.3	-	10.5	10.7	11.0	-	11.1	11.3	11.6	-	11.7	11.9	12.2	-	12.2	12.5	12.9	-
		HI PR	230	247	261	-	258	277	293	-	293	316	333	-	334	359	380	-	376	404	427	-	415	447	472	-
		LO PR	109	116	127	-	115	123	134	-	120	128	139	-	126	134	146	-	132	141	153	-	137	145	159	-
75	1796	MBh	47.2	48.6	52.6	56.4	46.1	47.4	51.3	55.1	45.0	46.3	50.1	53.8	43.9	**45.2**	48.9	52.5	41.7	42.9	46.5	49.9	38.6	39.8	43.0	46.2
		S/T	0.88	0.79	0.60	0.38	0.91	0.81	0.62	0.40	0.93	0.84	0.63	0.41	0.96	**0.86**	0.65	0.42	1.00	0.90	0.68	0.44	1.00	0.90	0.68	0.44
		Delta T	21	20	16	11	21	20	16	11	22	20	16	11	22	**20**	16	11	21	20	16	11	20	18	15	10
		KW	2.96	3.03	3.12	3.22	3.19	3.26	3.36	3.47	3.39	3.46	3.57	3.69	3.56	**3.64**	3.76	3.89	3.71	3.80	3.92	4.05	3.84	3.93	4.06	4.19
		AMPS	9.5	9.6	9.9	10.2	10.1	10.3	10.5	10.9	10.8	11.0	11.3	11.7	11.4	**11.6**	11.9	12.3	12.0	12.3	12.6	13.0	12.6	12.9	13.2	13.7
		HI PR	239	257	271	283	268	288	304	317	304	328	346	361	347	**373**	394	411	390	420	443	462	431	464	490	511
		LO PR	113	121	132	140	120	128	139	148	125	133	145	154	131	**139**	152	162	137	146	159	170	142	151	165	175
	1538	MBh	45.8	47.2	51.0	54.8	44.7	46.1	49.8	53.5	43.7	45.0	48.7	52.2	42.6	**43.9**	47.5	51.0	40.5	41.7	45.1	48.4	37.5	38.6	41.8	44.8
		S/T	0.84	0.75	0.57	0.37	0.87	0.78	0.59	0.38	0.89	0.80	0.60	0.39	0.92	**0.82**	0.62	0.40	0.95	0.85	0.65	0.42	0.96	0.86	0.65	0.42
		Delta T	23	21	17	12	23	21	18	12	23	21	18	12	23	**22**	18	12	23	21	17	12	22	20	16	11
		KW	2.94	3.00	3.10	3.19	3.16	3.23	3.33	3.44	3.36	3.43	3.54	3.66	3.53	**3.61**	3.73	3.85	3.68	3.76	3.89	4.02	3.81	3.90	4.02	4.16
		AMPS	9.4	9.6	9.8	10.1	10.0	10.2	10.5	10.8	10.7	10.9	11.2	11.6	11.3	**11.5**	11.9	12.2	11.9	12.2	12.5	12.9	12.5	12.8	13.1	13.6
		HI PR	236	254	268	280	265	285	301	314	301	324	342	357	343	**369**	390	407	386	416	439	458	427	459	485	506
		LO PR	112	120	130	139	119	126	138	147	123	131	143	153	130	**138**	150	160	136	144	158	168	140	149	163	174
	1416	MBh	45.1	46.4	50.3	54.0	44.1	45.4	49.1	52.7	43.0	44.3	47.9	51.4	42.0	**43.2**	46.8	50.2	39.9	41.0	44.4	47.7	36.9	38.0	41.2	44.2
		S/T	0.81	0.72	0.55	0.35	0.84	0.75	0.57	0.36	0.86	0.77	0.58	0.37	0.89	**0.79**	0.60	0.39	0.92	0.82	0.62	0.40	0.93	0.83	0.63	0.40
		Delta T	24	22	18	12	24	22	18	12	24	22	18	13	24	**22**	18	13	24	22	18	12	22	20	17	12
		KW	2.90	2.96	3.05	3.15	3.12	3.19	3.29	3.39	3.31	3.39	3.49	3.61	3.49	**3.56**	3.68	3.80	3.63	3.71	3.83	3.96	3.76	3.84	3.97	4.10
		AMPS	9.3	9.5	9.7	10.0	9.9	10.1	10.3	10.7	10.6	10.8	11.1	11.4	11.2	**11.4**	11.7	12.1	11.8	12.0	12.3	12.7	12.3	12.6	13.0	13.4
		HI PR	232	250	264	275	260	280	296	309	296	319	337	351	337	**363**	383	400	380	408	431	450	419	451	477	497
		LO PR	110	117	128	137	117	124	135	144	121	129	141	150	127	**135**	148	158	133	142	155	165	138	147	160	171

IDB = Entering Indoor Dry Bulb Temperature

Shaded area reflects ACCA (TVA) conditions

kW = Total system power

High & low pressures are measured at the liquid & suction service ports.

Amps: Unit amps (comp.+ evaporator + condenser fan motors)

Design Subcooling, 12±3 °F @ the liquid access fitting connection AHRI 95 test conditions. Design Superheat 8±3 °F @ the compressor suction access fitting connection.

			OUTDOOR AMBIENT TEMPERATURE																							
			65				75				85				95				105				115			
			ENTERING INDOOR WET BULB TEMPERATURE																							
IDB	AIRFLOW		59	63	67	71	59	63	67	71	59	63	67	71	59	63	67	71	59	63	67	71	59	63	67	71
80	1796	MBh	48.0	49.1	52.4	56.0	46.9	47.9	51.2	54.7	45.8	46.8	50.0	53.4	44.7	45.6	48.8	52.1	42.4	43.4	46.3	49.5	39.3	40.2	42.9	45.9
		S/T	0.96	0.90	0.74	0.55	1.00	0.94	0.76	0.57	1.00	0.96	0.78	0.58	1.00	1.00	0.81	0.60	1.00	1.00	0.84	0.63	1.00	1.00	0.84	0.63
		Delta T	24	23	20	16	24	23	20	16	23	23	20	16	23	23	20	16	22	22	20	16	20	21	19	15
		KW	2.99	3.05	3.14	3.25	3.21	3.28	3.39	3.50	3.42	3.49	3.60	3.72	3.59	3.67	3.79	3.92	3.74	3.83	3.95	4.09	3.87	3.96	4.09	4.23
		AMPS	9.5	9.7	10.0	10.3	10.2	10.3	10.6	11.0	10.9	11.1	11.4	11.7	11.5	11.7	12.0	12.4	12.1	12.3	12.7	13.1	12.7	13.0	13.3	13.8
		HI PR	241	259	274	286	270	291	307	320	307	331	349	364	350	377	398	415	394	424	448	467	435	468	495	516
		LO PR	115	122	133	142	121	129	141	150	126	134	146	156	132	141	154	163	139	147	161	171	143	152	166	177
	1538	MBh	46.6	47.6	50.9	54.4	45.5	46.5	49.7	53.1	44.4	45.4	48.5	51.9	43.4	44.3	**47.3**	50.6	41.2	42.1	45.0	48.1	38.2	39.0	41.7	44.5
		S/T	0.92	0.86	0.70	0.52	0.95	0.89	0.73	0.54	0.98	0.92	0.75	0.56	1.00	0.95	**0.77**	0.58	1.00	0.98	0.80	0.60	1.00	0.99	0.81	0.60
		Delta T	26	25	21	17	26	25	22	17	26	25	22	17	26	25	**22**	17	25	25	21	17	23	23	20	16
		KW	2.96	3.03	3.12	3.22	3.19	3.26	3.36	3.47	3.39	3.46	3.57	3.69	3.56	3.64	**3.76**	3.89	3.71	3.80	3.92	4.05	3.84	3.93	4.06	4.20
		AMPS	9.5	9.6	9.9	10.2	10.1	10.3	10.5	10.9	10.8	11.0	11.3	11.7	11.4	11.6	**12.0**	12.3	12.0	12.3	12.6	13.0	12.6	12.9	13.2	13.7
		HI PR	239	257	271	283	268	288	304	317	304	328	346	361	347	373	**394**	411	390	420	443	462	431	464	490	511
		LO PR	113	121	132	140	120	128	139	148	125	133	145	154	131	139	**152**	162	137	146	159	170	142	151	165	175
	1416	MBh	45.9	46.9	50.1	53.6	44.8	45.8	49.0	52.3	43.8	44.7	47.8	51.1	42.7	43.6	46.6	49.8	40.6	41.5	44.3	47.3	37.6	38.4	41.0	43.9
		S/T	0.89	0.83	0.68	0.51	0.92	0.86	0.70	0.52	0.94	0.88	0.72	0.54	0.97	0.91	0.74	0.56	1.01	0.95	0.77	0.58	1.00	0.95	0.78	0.58
		Delta T	26	25	22	18	27	26	22	18	27	26	22	18	27	26	22	18	27	25	22	18	24	24	21	17
		KW	2.92	2.98	3.08	3.18	3.15	3.21	3.31	3.42	3.34	3.41	3.52	3.64	3.51	3.59	3.71	3.83	3.66	3.74	3.86	3.99	3.79	3.87	4.00	4.13
		AMPS	9.3	9.5	9.8	10.1	10.0	10.1	10.4	10.7	10.6	10.9	11.2	11.5	11.2	11.5	11.8	12.2	11.8	12.1	12.4	12.8	12.4	12.7	13.1	13.5
		HI PR	234	252	266	278	263	283	299	312	299	322	340	355	341	367	387	404	383	413	436	454	424	456	481	502
		LO PR	112	119	130	138	118	125	137	146	122	130	142	151	129	137	149	159	135	143	157	167	139	148	162	172
85	1796	MBh	48.8	49.8	52.1	55.6	47.7	48.6	50.9	54.3	46.6	47.5	49.7	53.0	45.4	46.3	48.5	51.8	43.2	44.0	46.1	49.2	40.0	40.8	42.7	45.5
		S/T	1.00	0.98	0.88	0.71	1.00	1.00	0.91	0.74	1.00	1.00	0.94	0.76	1.00	1.00	0.97	0.78	1.00	1.00	1.00	0.81	1.00	1.00	1.00	0.82
		Delta T	25	25	24	20	24	25	24	21	24	24	24	21	23	24	24	21	22	23	24	20	20	21	22	19
		KW	3.01	3.07	3.17	3.27	3.24	3.31	3.42	3.53	3.44	3.52	3.63	3.75	3.62	3.70	3.82	3.95	3.78	3.86	3.99	4.12	3.91	3.99	4.13	4.27
		AMPS	9.6	9.8	10.0	10.3	10.2	10.4	10.7	11.0	10.9	11.2	11.5	11.8	11.6	11.8	12.1	12.5	12.2	12.4	12.8	13.2	12.8	13.1	13.5	13.9
		HI PR	243	262	277	288	273	294	310	324	311	334	353	368	354	381	402	419	398	428	452	472	440	473	500	521
		LO PR	116	123	134	143	122	130	142	151	127	135	148	157	134	142	155	165	140	149	162	173	145	154	168	179
	1538	MBh	47.4	48.3	50.6	54.0	46.3	47.2	49.5	52.8	45.2	46.1	48.3	51.5	44.1	45.0	47.1	50.2	41.9	42.7	44.7	47.7	38.8	39.6	41.4	44.2
		S/T	0.96	0.93	0.84	0.68	1.00	0.96	0.87	0.71	1.00	0.99	0.89	0.72	1.00	1.00	0.92	0.75	1.00	1.00	0.96	0.78	1.00	1.00	0.96	0.78
		Delta T	27	27	25	22	28	27	26	22	27	27	26	22	26	27	26	22	25	26	26	22	23	24	24	21
		KW	2.99	3.05	3.14	3.25	3.21	3.28	3.39	3.50	3.42	3.49	3.60	3.72	3.59	3.67	3.79	3.92	3.74	3.83	3.95	4.09	3.87	3.96	4.09	4.23
		AMPS	9.5	9.7	10.0	10.3	10.2	10.3	10.6	11.0	10.9	11.1	11.4	11.7	11.5	11.7	12.0	12.4	12.1	12.3	12.7	13.1	12.7	13.0	13.3	13.8
		HI PR	241	259	274	286	270	291	307	320	307	331	349	364	350	377	398	415	394	424	448	467	435	468	495	516
		LO PR	115	122	133	142	121	129	141	150	126	134	146	156	132	141	154	163	139	147	161	171	143	152	166	177
	1416	MBh	46.7	47.6	49.9	53.2	45.6	46.5	48.7	52.0	44.5	45.4	47.6	50.7	43.5	44.3	46.4	49.5	41.3	42.1	44.1	47.0	38.2	39.0	40.8	43.6
		S/T	0.93	0.90	0.81	0.66	0.96	0.93	0.84	0.68	0.99	0.95	0.86	0.70	1.00	0.98	0.89	0.72	1.00	1.00	0.92	0.75	1.00	1.00	0.93	0.75
		Delta T	28	28	26	23	29	28	27	23	29	28	27	23	28	28	27	23	27	27	26	23	25	25	25	21
		KW	2.95	3.01	3.10	3.20	3.17	3.24	3.34	3.45	3.37	3.44	3.55	3.67	3.54	3.62	3.74	3.86	3.69	3.77	3.90	4.03	3.82	3.90	4.03	4.17
		AMPS	9.4	9.6	9.8	10.1	10.0	10.2	10.5	10.8	10.7	10.9	11.2	11.6	11.3	11.6	11.9	12.3	11.9	12.2	12.5	12.9	12.5	12.8	13.2	13.6
		HI PR	237	255	269	281	266	286	302	315	302	325	343	358	344	370	391	408	387	417	440	459	428	460	486	507
		LO PR	113	120	131	139	119	127	138	147	124	132	144	153	130	138	151	161	136	145	158	168	141	150	164	174

IDB = Entering Indoor Dry Bulb Temperature

Shaded area reflects AHRI conditions

kW = Total system power

High & low pressures are measured at the liquid & suction service ports.

Amps: Unit amps (comp.+ evaporator + condenser fan motors)

Design Subcooling, 12±3 °F @ the liquid access fitting connection AHRI 95 test conditions. Design Superheat 8±3 °F @ the compressor suction access fitting connection.

			OUTDOOR AMBIENT TEMPERATURE																							
			65				75				85				95				105				115			
			ENTERING INDOOR WET BULB TEMPERATURE																							
IDB	AIRFLOW		59	63	67	71	59	63	67	71	59	63	67	71	59	63	67	71	59	63	67	71	59	63	67	71
70	2244	MBh	59.1	61.3	67.1	-	57.7	59.8	65.6	-	56.4	58.4	64.0	-	55.0	57.0	62.4	-	52.2	54.1	59.3	-	48.4	50.2	54.9	-
		S/T	0.75	0.63	0.43	-	0.78	0.65	0.45	-	0.80	0.67	0.46	-	0.82	0.69	0.48	-	0.85	0.71	0.49	-	0.86	0.72	0.50	-
		Delta T	18	16	12	-	18	16	12	-	18	16	12	-	19	16	12	-	18	16	12	-	17	15	11	-
		KW	3.76	3.83	3.95	-	4.03	4.11	4.24	-	4.27	4.36	4.49	-	4.48	4.58	4.72	-	4.66	4.76	4.91	-	4.82	4.92	5.08	-
		AMPS	11.9	12.2	12.5	-	12.7	12.9	13.2	-	13.5	13.7	14.1	-	14.2	14.5	14.9	-	14.9	15.2	15.6	-	15.6	16.0	16.4	-
		HI PR	239	258	272	-	269	289	305	-	306	329	347	-	348	375	396	-	392	421	445	-	433	466	492	-
		LO PR	112	119	130	-	118	126	137	-	123	131	143	-	129	137	150	-	135	144	157	-	140	149	163	-
	2004	MBh	58.2	60.4	66.1	-	56.9	59.0	64.6	-	55.5	57.6	63.1	-	54.2	56.1	61.5	-	51.5	53.3	58.4	-	47.7	49.4	54.1	-
		S/T	0.72	0.60	0.42	-	0.74	0.62	0.43	-	0.76	0.64	0.44	-	0.79	0.66	0.46	-	0.82	0.68	0.47	-	0.82	0.69	0.48	-
		Delta T	19	17	13	-	19	17	13	-	19	17	13	-	20	17	13	-	19	17	13	-	18	16	12	-
		KW	3.74	3.81	3.93	-	4.01	4.09	4.21	-	4.25	4.34	4.47	-	4.46	4.55	4.69	-	4.64	4.74	4.88	-	4.79	4.89	5.05	-
		AMPS	11.9	12.1	12.4	-	12.6	12.8	13.2	-	13.4	13.7	14.0	-	14.1	14.4	14.8	-	14.9	15.2	15.6	-	15.6	15.9	16.3	-
		HI PR	238	256	270	-	267	287	303	-	303	327	345	-	346	372	393	-	389	418	442	-	430	462	488	-
		LO PR	111	118	129	-	117	125	136	-	122	130	142	-	128	136	149	-	134	143	156	-	139	148	161	-
	1770	MBh	55.3	57.3	62.8	-	54.0	56.0	61.4	-	52.8	54.7	59.9	-	51.5	53.3	58.4	-	48.9	50.7	55.5	-	45.3	46.9	51.4	-
		S/T	0.69	0.57	0.40	-	0.71	0.60	0.41	-	0.73	0.61	0.42	-	0.75	0.63	0.44	-	0.78	0.65	0.45	-	0.79	0.66	0.46	-
		Delta T	20	17	13	-	20	17	13	-	20	17	13	-	20	17	13	-	20	17	13	-	19	16	12	-
		KW	3.68	3.76	3.87	-	3.95	4.03	4.15	-	4.18	4.27	4.40	-	4.39	4.48	4.62	-	4.56	4.66	4.81	-	4.71	4.81	4.97	-
		AMPS	11.7	11.9	12.2	-	12.4	12.7	13.0	-	13.2	13.5	13.8	-	13.9	14.2	14.6	-	14.6	14.9	15.3	-	15.3	15.6	16.1	-
		HI PR	233	251	265	-	262	281	297	-	297	320	338	-	339	365	385	-	381	410	433	-	421	453	478	-
		LO PR	109	116	127	-	115	122	134	-	120	127	139	-	126	134	146	-	132	140	153	-	136	145	158	-
75	2244	MBh	60.1	61.9	67.0	71.9	58.7	60.5	65.4	70.2	57.3	59.0	63.9	68.6	55.9	**57.6**	62.3	66.9	53.1	54.7	59.2	63.5	49.2	50.7	54.8	58.9
		S/T	0.85	0.76	0.58	0.37	0.88	0.79	0.60	0.38	0.91	0.81	0.61	0.39	0.94	**0.84**	0.63	0.41	0.97	0.87	0.66	0.42	0.98	0.88	0.66	0.43
		Delta T	21	19	16	11	21	20	16	11	21	20	16	11	21	**20**	16	11	21	19	16	11	20	18	15	10
		KW	3.79	3.86	3.98	4.10	4.06	4.14	4.27	4.40	4.30	4.39	4.53	4.67	4.52	**4.61**	4.76	4.91	4.70	4.80	4.95	5.11	4.86	4.96	5.12	5.29
		AMPS	12.0	12.2	12.5	12.9	12.7	13.0	13.3	13.7	13.6	13.9	14.2	14.6	14.3	**14.6**	15.0	15.4	15.1	15.3	15.8	16.2	15.8	16.1	16.5	17.0
		HI PR	242	260	275	287	271	292	308	322	309	332	351	366	352	**378**	400	417	396	426	450	469	437	470	497	518
		LO PR	113	120	131	140	120	127	139	148	124	132	144	154	130	**139**	152	161	137	145	159	169	141	150	164	175
	2004	MBh	59.2	61.0	66.0	70.8	57.8	59.6	64.5	69.2	56.5	58.1	62.9	67.5	55.1	**56.7**	61.4	65.9	52.3	53.9	58.3	62.6	48.5	49.9	54.0	58.0
		S/T	0.82	0.73	0.55	0.36	0.85	0.76	0.57	0.37	0.87	0.78	0.59	0.38	0.90	**0.80**	0.61	0.39	0.93	0.83	0.63	0.40	0.94	0.84	0.63	0.41
		Delta T	22	20	17	12	22	21	17	12	22	21	17	12	23	**21**	17	12	22	21	17	12	21	19	16	11
		KW	3.77	3.84	3.96	4.08	4.04	4.12	4.25	4.38	4.28	4.37	4.50	4.65	4.49	**4.59**	4.73	4.88	4.67	4.77	4.92	5.08	4.83	4.93	5.09	5.26
		AMPS	12.0	12.2	12.5	12.8	12.7	12.9	13.2	13.6	13.5	13.8	14.1	14.6	14.2	**14.5**	14.9	15.4	15.0	15.3	15.7	16.2	15.7	16.0	16.4	17.0
		HI PR	240	259	273	285	270	290	306	319	307	330	348	363	349	**376**	397	414	393	423	446	466	434	467	493	514
		LO PR	112	120	130	139	119	126	138	147	123	131	143	153	130	**138**	150	160	136	144	158	168	140	149	163	174
	1770	MBh	56.3	57.9	62.7	67.3	55.0	56.6	61.2	65.7	53.6	55.2	59.8	64.2	52.3	**53.9**	58.3	62.6	49.7	51.2	55.4	59.5	46.1	47.4	51.3	55.1
		S/T	0.78	0.70	0.53	0.34	0.81	0.73	0.55	0.35	0.83	0.74	0.56	0.36	0.86	**0.77**	0.58	0.37	0.89	0.80	0.60	0.39	0.90	0.80	0.61	0.39
		Delta T	23	21	17	12	23	21	17	12	23	21	17	12	23	**21**	18	12	23	21	17	12	21	20	16	11
		KW	3.71	3.78	3.90	4.01	3.98	4.06	4.18	4.31	4.21	4.30	4.43	4.57	4.42	**4.52**	4.66	4.80	4.60	4.70	4.85	5.00	4.75	4.85	5.01	5.17
		AMPS	11.8	12.0	12.3	12.7	12.5	12.7	13.1	13.4	13.3	13.6	13.9	14.3	14.0	**14.3**	14.7	15.1	14.8	15.0	15.4	15.9	15.5	15.8	16.2	16.7
		HI PR	235	253	268	279	264	284	300	313	300	323	341	356	342	**368**	389	406	385	414	437	456	425	458	483	504
		LO PR	110	117	128	136	116	124	135	144	121	129	140	150	127	**135**	147	157	133	142	155	165	138	146	160	170

IDB = Entering Indoor Dry Bulb Temperature

Shaded area reflects ACCA (TVA) conditions

kW = Total system power

High & low pressures are measured at the liquid & suction service ports.

Amps: Unit amps (comp.+ evaporator + condenser fan motors)

Design Subcooling, 12±3 °F @ the liquid access fitting connection AHRI 95 test conditions. Design Superheat 8±3 °F @ the compressor suction access fitting connection.

			OUTDOOR AMBIENT TEMPERATURE																							
			65				75				85				95				105				115			
			ENTERING INDOOR WET BULB TEMPERATURE																							
IDB	AIRFLOW		59	63	67	71	59	63	67	71	59	63	67	71	59	63	67	71	59	63	67	71	59	63	67	71
80	2244	MBh	61.2	62.5	66.8	71.4	59.8	61.1	65.2	69.7	58.3	59.6	63.7	68.1	56.9	58.2	62.1	66.4	54.1	55.2	59.0	63.1	50.1	51.2	54.7	58.4
		S/T	0.94	0.88	0.71	0.53	0.97	0.91	0.74	0.55	1.00	0.93	0.76	0.57	1.00	0.96	0.78	0.59	1.00	1.00	0.81	0.61	1.00	1.00	0.82	0.61
		Delta T	23	22	20	16	24	23	20	16	24	23	20	16	23	23	20	16	22	23	20	16	21	21	18	15
		KW	3.82	3.89	4.01	4.13	4.09	4.18	4.30	4.44	4.34	4.43	4.57	4.71	4.55	4.65	4.80	4.95	4.74	4.84	4.99	5.15	4.90	5.00	5.16	5.33
		AMPS	12.1	12.3	12.6	13.0	12.8	13.1	13.4	13.8	13.7	14.0	14.3	14.7	14.4	14.7	15.1	15.6	15.2	15.5	15.9	16.4	15.9	16.2	16.7	17.2
		HI PR	244	263	278	290	274	295	312	325	312	336	354	370	355	382	404	421	400	430	454	474	441	475	502	523
		LO PR	114	122	133	141	121	128	140	149	125	133	146	155	132	140	153	163	138	147	160	171	143	152	166	177
	2004	MBh	60.3	61.6	65.8	70.3	58.9	60.2	64.3	68.7	57.5	58.7	62.7	67.1	56.1	57.3	**61.2**	65.4	53.3	54.4	58.2	62.2	49.3	50.4	53.9	57.6
		S/T	0.90	0.84	0.68	0.51	0.93	0.87	0.71	0.53	0.95	0.89	0.73	0.54	0.98	0.92	**0.75**	0.56	1.00	0.96	0.78	0.58	1.00	0.96	0.78	0.59
		Delta T	25	24	21	16	25	24	21	17	25	24	21	17	25	24	**21**	17	24	24	21	17	23	22	19	15
		KW	3.80	3.87	3.99	4.11	4.07	4.15	4.28	4.41	4.31	4.40	4.54	4.68	4.53	4.62	**4.77**	4.92	4.71	4.81	4.96	5.13	4.87	4.97	5.13	5.30
		AMPS	12.0	12.3	12.6	12.9	12.8	13.0	13.3	13.7	13.6	13.9	14.2	14.7	14.4	14.6	**15.0**	15.5	15.1	15.4	15.8	16.3	15.8	16.1	16.6	17.1
		HI PR	243	261	276	288	272	293	309	323	310	333	352	367	353	380	**401**	418	397	427	451	470	438	472	498	520
		LO PR	113	121	132	140	120	128	139	148	125	133	145	154	131	139	**152**	162	137	146	159	170	142	151	165	175
	1770	MBh	57.3	58.5	62.5	66.8	55.9	57.2	61.1	65.3	54.6	55.8	59.6	63.7	53.3	54.4	58.2	62.2	50.6	51.7	55.2	59.1	46.9	47.9	51.2	54.7
		S/T	0.86	0.80	0.65	0.49	0.89	0.83	0.68	0.51	0.91	0.86	0.70	0.52	0.94	0.88	0.72	0.54	0.98	0.92	0.75	0.56	0.99	0.92	0.75	0.56
		Delta T	26	24	21	17	26	25	22	17	26	25	22	17	26	25	22	17	26	25	21	17	24	23	20	16
		KW	3.74	3.81	3.93	4.05	4.01	4.09	4.21	4.34	4.25	4.34	4.47	4.61	4.46	4.55	4.69	4.84	4.64	4.74	4.88	5.04	4.79	4.89	5.05	5.21
		AMPS	11.9	12.1	12.4	12.7	12.6	12.8	13.2	13.5	13.4	13.7	14.0	14.5	14.1	14.4	14.8	15.2	14.9	15.2	15.6	16.0	15.6	15.9	16.3	16.8
		HI PR	238	256	270	282	267	287	303	316	303	327	345	360	346	372	393	410	389	418	442	461	430	462	488	509
		LO PR	111	118	129	138	117	125	136	145	122	130	142	151	128	136	149	159	134	143	156	166	139	148	161	172
85	2244	MBh	62.2	63.5	66.5	70.9	60.8	62.0	64.9	69.3	59.4	60.5	63.4	67.6	57.9	59.0	61.8	66.0	55.0	56.1	58.7	62.7	51.0	51.9	54.4	58.0
		S/T	0.98	0.95	0.85	0.69	1.00	0.98	0.89	0.72	1.00	1.00	0.91	0.74	1.00	1.00	0.94	0.76	1.00	1.00	0.97	0.79	1.00	1.00	0.98	0.80
		Delta T	25	25	23	20	25	25	24	20	24	25	24	20	24	24	24	21	23	23	23	20	21	21	22	19
		KW	3.84	3.92	4.04	4.16	4.12	4.21	4.34	4.47	4.37	4.46	4.60	4.75	4.59	4.69	4.84	4.99	4.78	4.88	5.03	5.20	4.94	5.04	5.20	5.37
		AMPS	12.2	12.4	12.7	13.1	12.9	13.2	13.5	13.9	13.8	14.1	14.4	14.8	14.5	14.8	15.2	15.7	15.3	15.6	16.0	16.5	16.0	16.3	16.8	17.3
		HI PR	247	266	280	293	277	298	315	328	315	339	358	373	359	386	408	425	404	434	459	478	446	480	507	528
		LO PR	115	123	134	143	122	130	142	151	127	135	147	157	133	142	155	165	139	148	162	173	144	154	168	178
	2004	MBh	61.3	62.5	65.5	69.9	59.9	61.1	64.0	68.2	58.5	59.6	62.4	66.6	57.1	58.2	60.9	65.0	54.2	55.2	57.9	61.7	50.2	51.2	53.6	57.2
		S/T	0.94	0.91	0.82	0.66	0.97	0.94	0.85	0.69	1.00	0.96	0.87	0.71	1.00	0.99	0.90	0.73	1.00	1.00	0.93	0.76	1.00	1.00	0.94	0.76
		Delta T	26	26	25	21	27	26	25	22	27	26	25	22	26	27	25	22	25	25	25	21	23	23	23	20
		KW	3.82	3.90	4.02	4.14	4.10	4.19	4.31	4.45	4.35	4.44	4.58	4.72	4.57	4.66	4.81	4.96	4.75	4.85	5.00	5.17	4.91	5.01	5.17	5.34
		AMPS	12.1	12.3	12.7	13.0	12.9	13.1	13.4	13.8	13.7	14.0	14.3	14.8	14.5	14.7	15.1	15.6	15.2	15.5	15.9	16.4	15.9	16.2	16.7	17.2
		HI PR	245	264	279	290	275	296	313	326	313	337	355	371	356	383	405	422	401	431	455	475	443	477	503	525
		LO PR	115	122	133	142	121	129	141	150	126	134	146	156	132	141	154	163	139	147	161	171	143	152	166	177
	1770	MBh	58.3	59.4	62.2	66.4	56.9	58.0	60.8	64.8	55.6	56.6	59.3	63.3	54.2	55.2	57.9	61.7	51.5	52.5	55.0	58.6	47.7	48.6	50.9	54.3
		S/T	0.90	0.87	0.78	0.64	0.93	0.90	0.81	0.66	0.96	0.92	0.83	0.68	0.99	0.95	0.86	0.70	1.00	0.99	0.89	0.72	1.00	1.00	0.90	0.73
		Delta T	27	27	25	22	28	27	26	22	28	27	26	22	28	27	26	22	27	27	25	22	25	25	24	21
		KW	3.77	3.84	3.96	4.08	4.04	4.12	4.25	4.38	4.28	4.37	4.50	4.65	4.49	4.59	4.73	4.88	4.67	4.77	4.92	5.08	4.83	4.93	5.09	5.26
		AMPS	12.0	12.2	12.5	12.8	12.7	12.9	13.2	13.6	13.5	13.8	14.1	14.6	14.2	14.5	14.9	15.4	15.0	15.3	15.7	16.2	15.7	16.0	16.4	16.9
		HI PR	240	258	273	285	270	290	306	319	307	330	348	363	349	376	397	414	393	423	446	465	434	467	493	514
		LO PR	112	119	130	139	119	126	138	147	123	131	143	153	130	138	150	160	136	144	158	168	140	149	163	174

IDB = Entering Indoor Dry Bulb Temperature

Shaded area reflects AHRI conditions

kW = Total system power

High & low pressures are measured at the liquid & suction service ports.

Amps: Unit amps (comp.+ evaporator + condenser fan motors)

Design Subcooling, 12±3 °F @ the liquid access fitting connection AHRI 95 test conditions. Design Superheat 8±3 °F @ the compressor suction access fitting connection.

DOWNSHOT

SPEED TAP	ESP IN W.C.	CFM	AMPS	WATTS	RPM
T1	0.1	966	0.5	108	657
	0.2	850	0.52	115	710
	0.3	773	0.55	122	763
	0.4	678	0.59	130	819
	0.5	593	0.62	141	875
	0.6	---	---	---	---
	0.7	---	---	---	---
	0.8	---	---	---	---
	0.9	---	---	---	---
T2	0.1	1057	0.6	134	693
	0.2	956	0.62	140	740
	0.3	868	0.66	144	787
	0.4	788	0.69	156	839
	0.5	700	0.73	166	898
	0.6	618	0.76	174	946
	0.7	---	---	---	---
	0.8	---	---	---	---
	0.9	---	---	---	---
T3	0.1	1234	0.86	199	784
	0.2	1146	0.89	206	822
	0.3	1068	0.92	213	863
	0.4	977	0.96	221	910
	0.5	911	1.0	232	949
	0.6	842	1.04	245	998
	0.7	776	1.08	253	1031
	0.8	703	1.11	263	1082
	0.9	682	1.13	266	1107
T4	0.1	1363	1.03	242	822
	0.2	1253	1.09	251	874
	0.3	1176	1.12	260	910
	0.4	1110	1.15	270	940
	0.5	1034	1.19	279	981
	0.6	966	1.23	290	1028
	0.7	899	1.27	301	1074
	0.8	836	1.33	312	1117
	0.9	778	1.35	319	1146
T5	0.1	1413	1.14	268	849
	0.2	1299	1.18	275	899
	0.3	1233	1.23	259	933
	0.4	1166	1.26	296	963
	0.5	1096	1.3	307	1000
	0.6	1026	1.34	318	1040
	0.7	960	1.39	330	1052
	0.8	889	1.44	340	1132
	0.9	835	1.47	347	1169

HORIZONTAL

SPEED TAP	ESP IN W.C.	CFM	AMPS	WATTS	RPM
T1	0.1	1018	0.47	101	615
	0.2	969	0.49	109	653
	0.3	881	0.53	117	712
	0.4	818	0.55	125	768
	0.5	732	0.59	135	833
	0.6	658	0.63	142	890
	0.7	616	0.65	148	938
	0.8	---	---	---	---
	0.9	---	---	---	---
T2	0.1	1128	0.56	126	645
	0.2	1070	0.59	132	692
	0.3	994	0.62	138	727
	0.4	915	0.66	149	791
	0.5	839	0.69	156	838
	0.6	776	0.73	169	909
	0.7	698	0.77	179	963
	0.8	649	0.8	183	1003
	0.9	---	---	---	---
T3	0.1	1293	0.81	186	733
	0.2	1252	0.84	193	765
	0.3	1198	0.87	204	803
	0.4	1130	0.91	212	844
	0.5	1075	0.94	218	886
	0.6	1015	0.98	230	930
	0.7	941	1.02	242	984
	0.8	870	1.08	253	1045
	0.9	817	1.11	262	1080
T4	0.1	1404	0.99	232	789
	0.2	1367	1.02	240	817
	0.3	1334	1.05	244	845
	0.4	1265	1.09	257	882
	0.5	1207	1.13	265	922
	0.6	1153	1.17	272	958
	0.7	1090	1.21	283	1005
	0.8	1029	1.25	299	1052
	0.9	947	1.31	312	1111
T5	0.1	1457	1.08	254	805
	0.2	1413	1.12	266	839
	0.3	1359	1.16	273	870
	0.4	1307	1.2	285	911
	0.5	1253	1.23	291	940
	0.6	1197	1.28	304	978
	0.7	1138	1.31	310	1017
	0.8	1082	1.36	322	1059
	0.9	1029	1.41	335	1105

Notes:
Table represent dry coil without filter, to compensate for filter add 0.08" to measured E.S.P.. SCFM correction for wet coil = 4%. Models are shipped from the factory with speed tap set on T4.

DOWNSHOT

SPEED TAP	ESP IN W.C.	CFM	AMPS	WATTS	RPM
T1	0.1	1286	0.82	187	667
	0.2	1205	0.86	198	704
	0.3	1139	0.8	205	731
	0.4	1052	0.92	212	764
	0.5	982	0.95	215	790
	0.6	911	0.97	224	814
	0.7	840	1	230	837
	0.8	779	1.02	235	855
	0.9	717	1.04	242	879
T2	0.1	1470	1.09	251	726
	0.2	1399	1.12	260	758
	0.3	1315	1.16	271	790
	0.4	1253	1.19	281	814
	0.5	1180	1.22	287	842
	0.6	1110	1.26	292	867
	0.7	1042	1.29	300	891
	0.8	973	1.32	308	914
	0.9	916	1.34	314	933
T3	0.1	1747	1.75	413	855
	0.2	1668	1.8	414	884
	0.3	1609	1.84	436	908
	0.4	1557	1.88	442	931
	0.5	1489	1.92	453	957
	0.6	1419	1.97	476	984
	0.7	1377	2	472	1002
	0.8	1311	2.03	479	1022
	0.9	1256	2.07	488	1044
T4	0.1	1879	2.11	504	908
	0.2	1799	2.16	512	935
	0.3	1730	2.2	525	955
	0.4	1677	2.26	539	981
	0.5	1630	2.31	547	1006
	0.6	1558	2.35	557	1032
	0.7	1508	2.38	553	1049
	0.8	1443	2.43	588	1072
	0.9	1389	2.48	585	1091
T5	0.1	1903	2.28	542	931
	0.2	1838	2.31	561	952
	0.3	1785	2.38	571	977
	0.4	1723	2.41	574	1002
	0.5	1666	2.46	585	1020
	0.6	1612	2.51	596	1048
	0.7	1547	2.56	611	1067
	0.8	1505	2.59	607	1083
	0.9	1445	2.63	613	1109

HORIZONTAL

SPEED TAP	ESP IN W.C.	CFM	AMPS	WATTS	RPM
T1	0.1	1346	0.77	176	622
	0.2	1286	0.8	186	657
	0.3	1211	0.84	198	698
	0.4	1144	0.88	204	730
	0.5	1068	0.92	214	768
	0.6	996	0.95	222	798
	0.7	923	0.98	229	829
	0.8	839	1.01	235	857
	0.9	777	1.04	242	881
T2	0.1	1534	1.01	234	681
	0.2	1482	1.05	246	710
	0.3	1412	1.09	256	745
	0.4	1352	1.13	263	774
	0.5	1286	1.17	272	806
	0.6	1216	1.19	281	839
	0.7	1147	1.24	289	868
	0.8	1077	1.27	299	892
	0.9	1002	1.31	309	922
T3	0.1	1515	1.61	382	787
	0.2	1762	1.65	392	809
	0.3	1697	1.69	399	835
	0.4	1651	1.74	416	863
	0.5	1598	1.79	423	892
	0.6	1533	1.85	438	922
	0.7	1464	1.89	447	951
	0.8	1417	1.94	458	975
	0.9	1361	1.97	475	999
T4	0.1	1941	1.96	464	834
	0.2	1888	1.99	471	853
	0.3	1847	2.04	491	876
	0.4	1790	2.09	502	906
	0.5	1742	2.14	509	928
	0.6	1682	2.19	537	957
	0.7	1620	2.26	5337	987
	0.8	1576	2.28	547	1010
	0.9	1521	2.33	556	1034
T5	0.1	1994	2.09	497	845
	0.2	1946	2.16	511	876
	0.3	1893	2.15	518	896
	0.4	1865	2.28	536	923
	0.5	1795	2.26	548	351
	0.6	1741	2.39	555	376
	0.7	1681	2.38	572	999
	0.8	1630	2.47	597	1023
	0.9	1576	2.47	595	1046

Notes:
Table represent dry coil without filter, to compensate for filter add 0.08" to measured E.S.P.. SCFM correction for wet coil = 4%. Models are shipped from the factory with speed tap set on T4.

DOWNSHOT

SPEED TAP	ESP IN W.C.	CFM	AMPS	WATTS	RPM
	0.1	1334	1.65	180	627
	0.2	1286	1.75	192	665
	0.3	1212	1.83	202	715
	0.4	1144	1.94	216	759
T1	0.5	1077	1.99	222	792
	0.6	1039	2.10	238	830
	0.7	953	2.17	248	874
	0.8	904	2.27	258	913
	0.9	825	2.30	266	940
	0.1	1512	2.12	240	682
	0.2	1469	2.24	254	720
	0.3	1397	2.31	264	759
	0.4	1333	2.44	282	803
T2	0.5	1285	2.54	296	836
	0.6	1221	2.59	304	874
	0.7	1173	2.72	322	913
	0.8	1118	2.77	328	946
	0.9	1049	2.90	344	984
	0.1	2053	4.27	540	869
	0.2	2014	4.39	558	896
	0.3	1999	4.60	576	929
	0.4	1947	4.68	588	957
T3	0.5	1897	4.79	608	989
	0.6	1857	4.87	620	1012
	0.7	1763	4.99	640	1050
	0.8	1741	5.06	650	1072
	0.9	1669	5.19	668	1105
	0.1	2137	4.95	634	913
	0.2	2093	5.07	652	940
	0.3	2095	5.19	670	962
	0.4	2026	5.28	682	990
T4	0.5	1980	5.40	698	1018
	0.6	1961	5.49	720	1039
	0.7	1914	5.58	732	1072
	0.8	1845	5.70	742	1100
	0.9	1766	5.69	740	1127
	0.1	2299	5.70	742	942
	0.2	2233	5.80	748	969
	0.3	2217	5.90	768	990
	0.4	2157	6.07	786	1018
T5	0.5	2131	6.12	804	1045
	0.6	2060	6.21	816	1073
	0.7	2015	6.30	820	1095
	0.8	1940	6.27	816	1111
	0.9	1862	6.13	790	1128

HORIZONTAL

SPEED TAP	ESP IN W.C.	CFM	AMPS	WATTS	RPM
	0.1	1355	1.57	174	599
	0.2	1281	1.66	182	651
	0.3	1235	1.76	196	693
	0.4	1168	1.81	202	726
T1	0.5	1118	1.94	218	775
	0.6	1049	2.03	232	819
	0.7	982	2.10	240	858
	0.8	922	2.14	246	885
	0.9	871	2.25	260	927
	0.1	1544	2.04	234	660
	0.2	1490	2.17	250	704
	0.3	1427	2.25	260	742
	0.4	1370	2.35	276	781
T2	0.5	1319	2.42	282	809
	0.6	1274	2.52	296	849
	0.7	1210	2.62	316	891
	0.8	1137	2.73	326	935
	0.9	1106	2.77	336	957
	0.1	2099	4.13	516	825
	0.2	2068	4.25	536	852
	0.3	2029	4.37	552	885
	0.4	1971	4.48	568	913
T3	0.5	1911	4.61	586	950
	0.6	1876	4.73	604	973
	0.7	1821	4.86	622	1012
	0.8	1792	4.91	630	1028
	0.9	1740	5.03	648	1067
	0.1	2233	4.76	608	863
	0.2	2168	4.91	628	896
	0.3	2125	5.02	640	924
	0.4	2070	5.14	660	951
T4	0.5	2050	5.27	678	979
	0.6	1980	5.41	696	1012
	0.7	1954	5.47	704	1034
	0.8	1893	5.60	724	1067
	0.9	1852	5.70	736	1089
	0.1	2322	5.44	710	904
	0.2	2294	5.55	726	934
	0.3	2254	5.68	742	958
	0.4	2201	5.80	766	990
T5	0.5	2147	5.93	782	1017
	0.6	2117	6.01	788	1039
	0.7	2081	6.12	808	1060
	0.8	2017	6.22	822	1094
	0.9	1932	6.10	804	1111

Notes:
Table represent dry coil without filter, to compensate for filter add 0.08" to measured E.S.P.. SCFM correction for wet coil = 4%. Models are shipped from the factory with speed tap set on T4.

AIRFLOW PRESSURE DROP OF DOWNFLOW ECONOMIZER FOR 3 TO 6 TON ROOFTOP UNITS (100% RETURN AIR)											
SCFM	800	1000	1200	1400	1600	1800	2000	2200	2400	2600	2800
in. WG	0.02	0.04	0.05	0.07	0.09	0.12	0.14	0.17	0.21	0.24	0.28

High Efficiency MERV 13 Air Filter Option

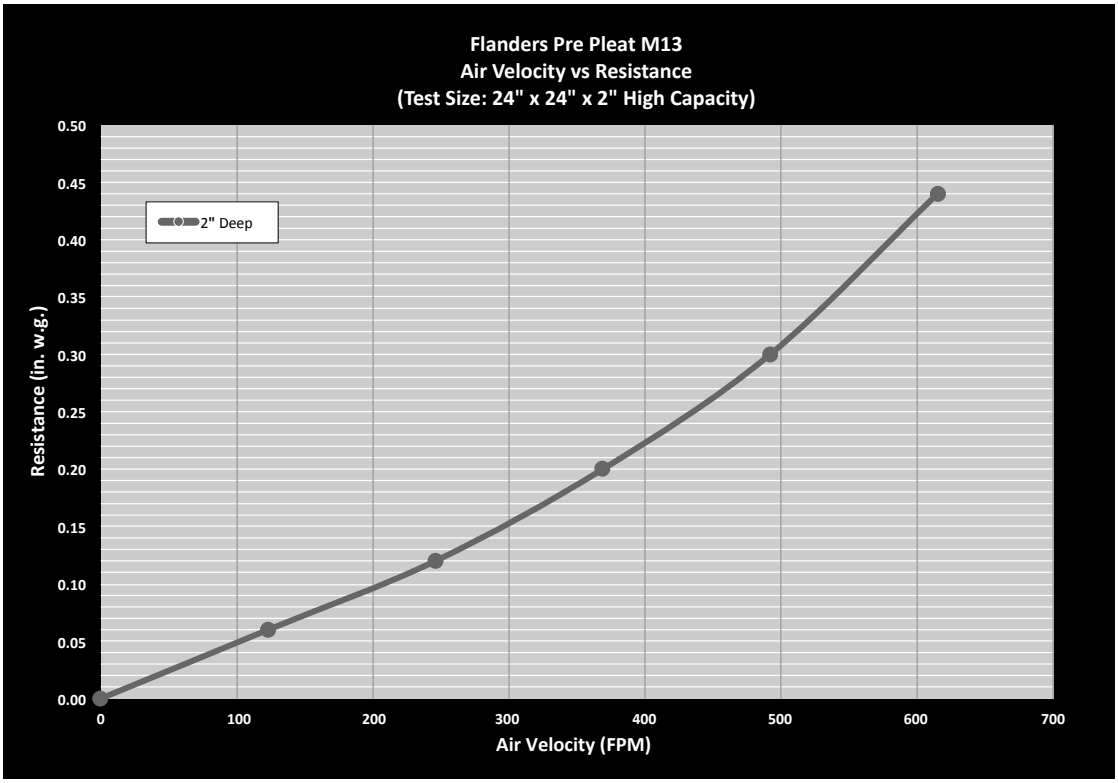

Tonnage:	Filter Nominal Size:	Part Number:	Order Qty:
3	24 x 24 x 2	0160L00203	1
4	14 x 20 x 2	0160L00204	4
5	16 x 20 x 2	0160L00205	4

Crankcase Heater Selection Table

ZP/ZPS...	Compressor Diameter	Compressor Voltage			Crankcase Heater Watts
		230V	460V	575V	
16-31	5.5"	0163R00002S	0163R00031S	0163R00032S	40
39-83	6.58/7.3"	0130L00017S	0130L00018S	0130L00019S	70
103-137	9.14”	0130L00020S	0130L00021S	0130L00022S	90

DC*,DT* & DS* Tonnage	Compressor Voltage			Crankcase Heater Watts
	230V	460V	575V	
3 Ton	0163R00002S	0163R00031S	0163R00032S	40
4 Ton-5 Ton	0130L00017S	0130L00018S	0130L00019S	70

*Includes C,G&H models.

3 TONS

MODEL NUMBER	ELECTRICAL RATING	COMPRESSOR CIRCUIT 1		COMPRESSOR CIRCUIT 2		OUTDOOR FAN MOTOR			INDOOR FAN MOTOR			OPTIONAL POWERED CONVIENIENCE OUTLET	POWER SUPPLY	
		RLA	LRA	RLA	LRA	QTY	HP	FLA	TYPE	HP	FLA	FLA	MCA	MOP
DTG036***1D	208/230-1-60	14.1	77.0			1	0.25	1.40	Standard - Direct Drive	0.50	3.90	-	22.9 / 22.9	35 / 35
												7.2 / 6.5	30.1 / 29.4	40 / 40
DTG036***3D	208/230-3-60	9.0	71.0			1	0.25	1.40	Standard - Direct Drive	0.50	3.90	-	16.5 / 16.5	25 / 25
												7.2 / 6.5	23.7 / 23.0	30 / 30

4 TONS

MODEL NUMBER	ELECTRICAL RATING	COMPRESSOR CIRCUIT 1		COMPRESSOR CIRCUIT 2		OUTDOOR FAN MOTOR			INDOOR FAN MOTOR			OPTIONAL POWERED CONVIENIENCE OUTLET	POWER SUPPLY	
		RLA	LRA	RLA	LRA	QTY	HP	FLA	TYPE	HP	FLA	FLA	MCA	MOP
DTG048XXX1D	208/230-1-60	19.9	109.0			1	0.25	1.40	Standard - Direct Drive	1.00	6.90	-	33.1 / 33.1	50 / 50
												7.2 / 6.5	40.3 / 39.6	60 / 50
DTG048XXX3D	208/230-3-60	13.1	83.1			1	0.25	1.40	Standard - Direct Drive	1.00	6.90	-	24.7 / 24.7	35 / 35
												7.2 / 6.5	31.9 / 31.2	45 / 40

5 TONS

MODEL NUMBER	ELECTRICAL RATING	COMPRESSOR CIRCUIT 1		COMPRESSOR CIRCUIT 2		OUTDOOR FAN MOTOR			INDOOR FAN MOTOR			OPTIONAL POWERED CONVIENIENCE OUTLET	POWER SUPPLY	
		RLA	LRA	RLA	LRA	QTY	HP	FLA	TYPE	HP	FLA	FLA	MCA	MOP
DTG060XXX1D	208/230-1-60	25.0	134.0			1	0.33	2.00	Standard - Direct Drive	1.00	6.90	-	40.2 / 40.2	60 / 60
												7.2 / 6.5	47.4 / 46.7	70 / 70
DTG060XXX3D	208/230-3-60	15.9	110.0			1	0.33	2.00	Standard - Direct Drive	1.00	6.90	-	28.8 / 28.8	40 / 40
												7.2 / 6.5	36.0 / 35.3	50 / 50

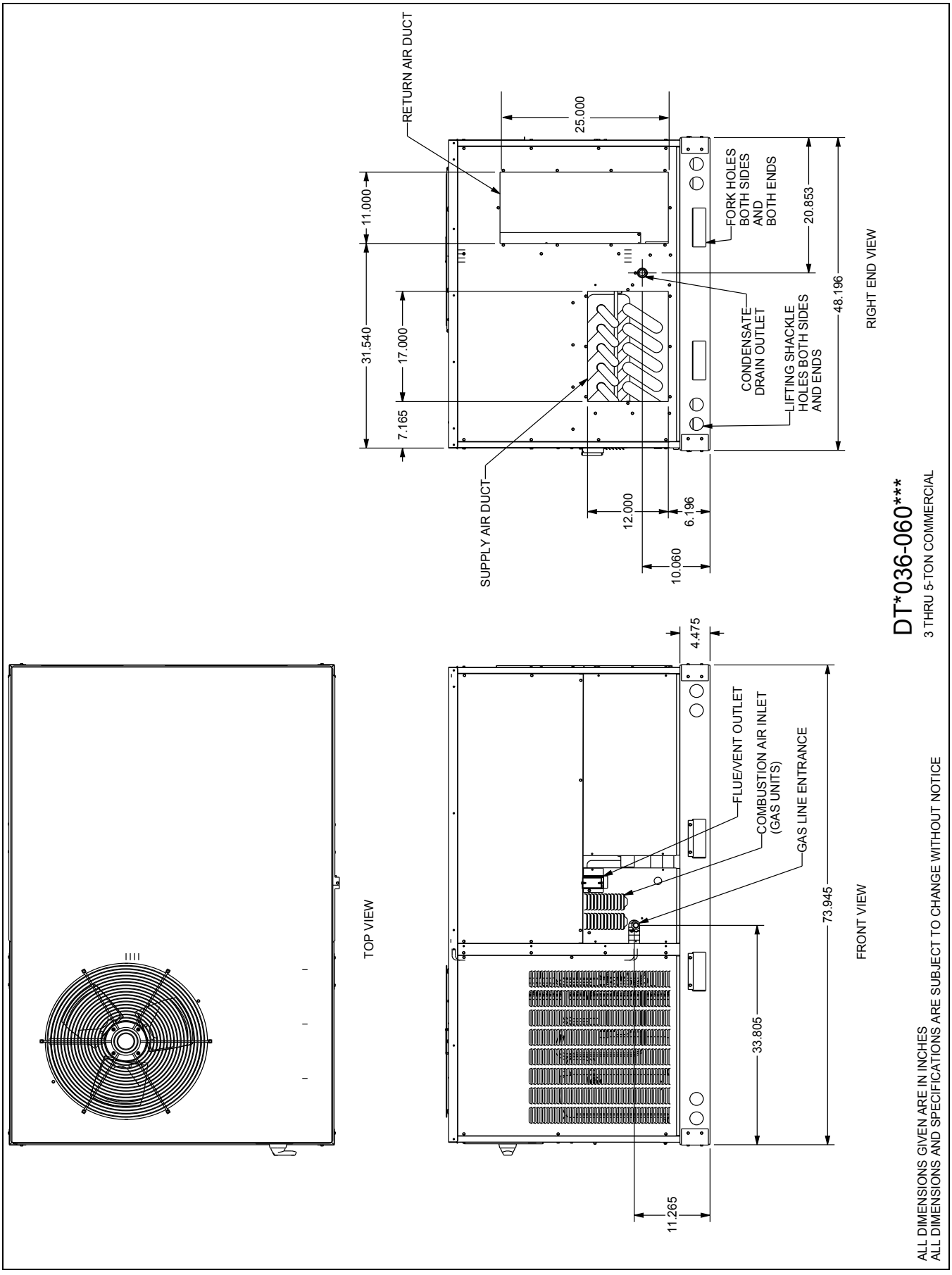
RETURN AIR DUCT
25.000
11.000
31.540
17.000
7.165
FORK HOLES
BOTH SIDES
AND
BOTH ENDS
20.853
48.196
CONDENSATE
DRAIN OUTLET
LIFTING SHACKLE
HOLES BOTH SIDES
AND ENDS
RIGHT END VIEW
SUPPLY AIR DUCT
12.000
6.196
10.060
4.475
FLUE/VENT OUTLET
COMBUSTION AIR INLET
(GAS UNITS)
GAS LINE ENTRANCE
73.945
33.805
11.265
FRONT VIEW
TOP VIEW
DT*036-060***
3 THRU 5-TON COMMERCIAL
ALL DIMENSIONS GIVEN ARE IN INCHES
ALL DIMENSIONS AND SPECIFICATIONS ARE SUBJECT TO CHANGE WITHOUT NOTICE

MODEL TONNAGES	"A"	"B"	"C"
3-TON COMMERCIAL GAS, HT PUMP, AIR CONDITIONER	38.840	16.555	26.055
4-TON COMMERCIAL GAS, HT PUMP, AIR CONDITIONER	38.840	16.555	26.055
5-TON COMMERCIAL GAS, HT PUMP, AIR CONDITIONER	42.840	20.555	30.055

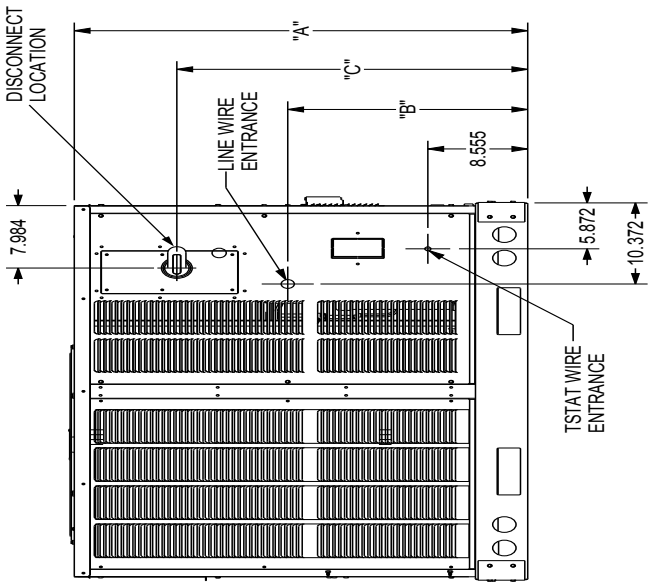

LEFT END VIEW

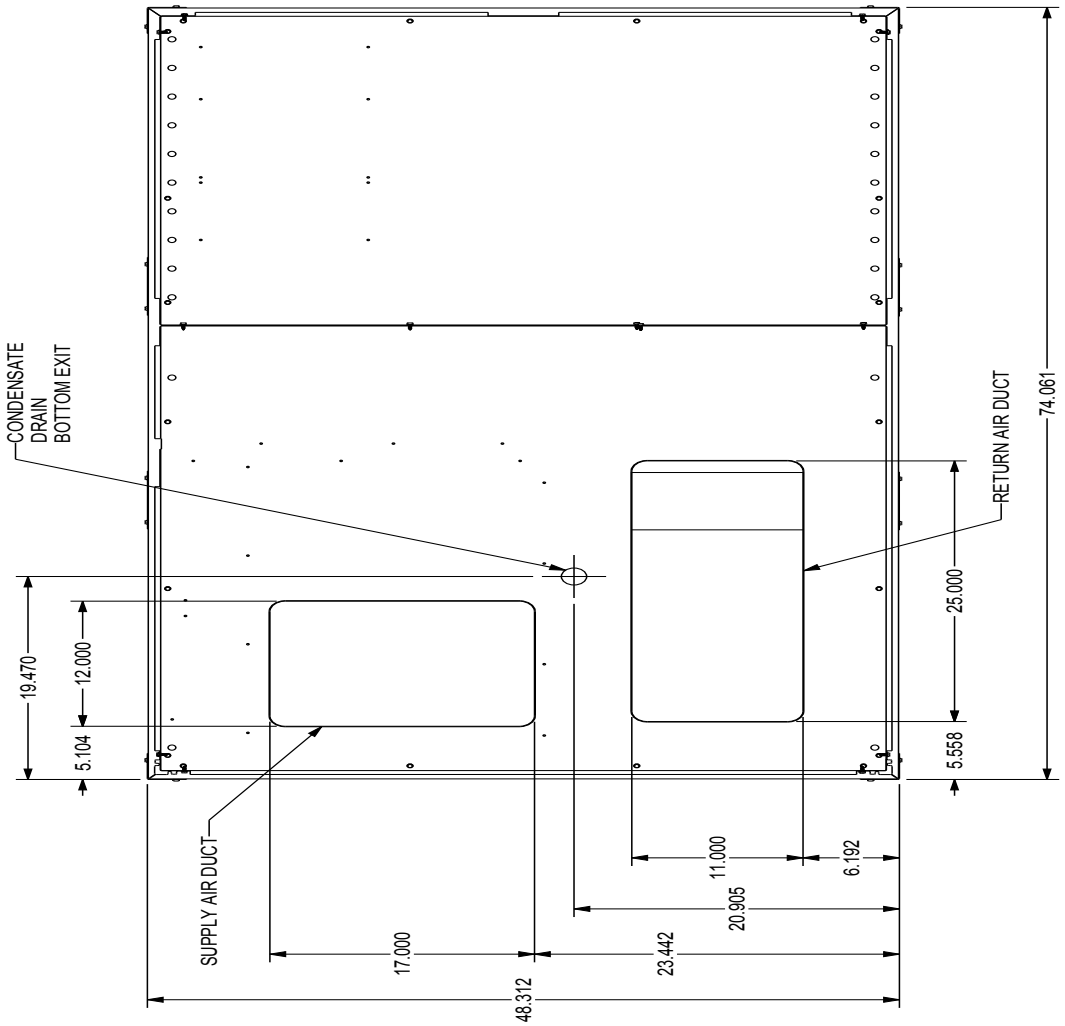

BASE PAN VIEW (VIEWED FROM TOP)

Maintain an adequate clearance around the unit for safety, service, maintenance, and proper unit operation. Leave a clearance of 48" on all sides of the unit for possible compressor removal or service access, and to ensure proper ventilation and condenser airflow. Do not install the unit Beneath any obstruction. Install the unit away from all building exhausts to inhibit ingestion of exhaust air into the unit's fresh-air intake.

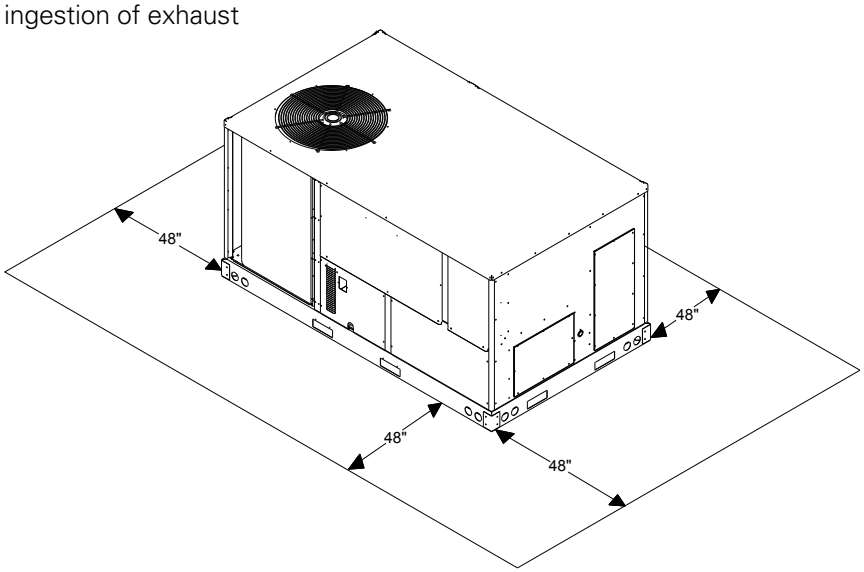

ELECTRICAL ENTRANCE LOCATIONS

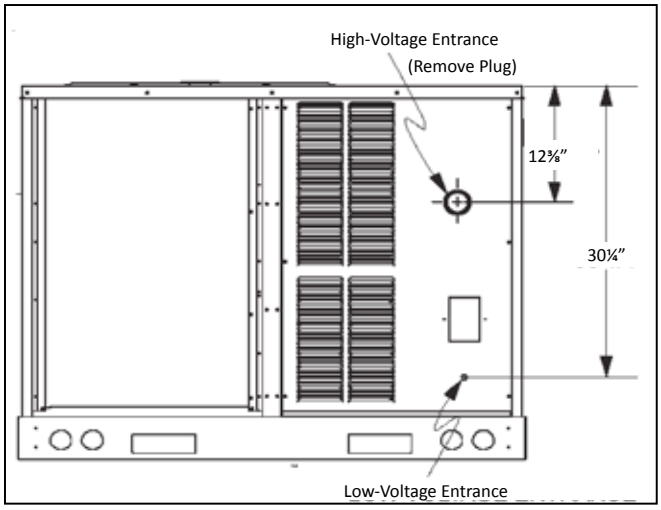

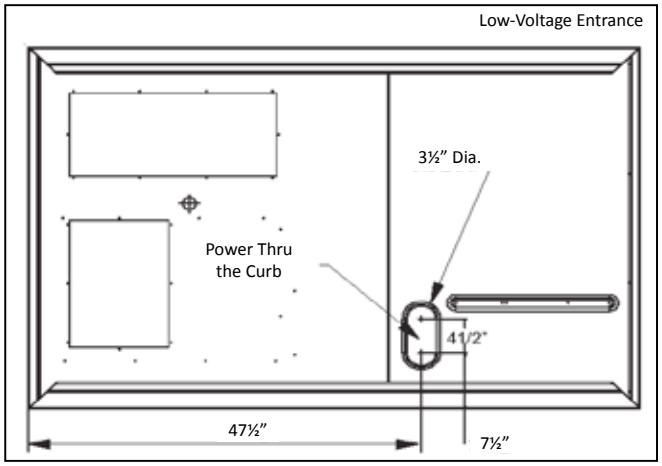

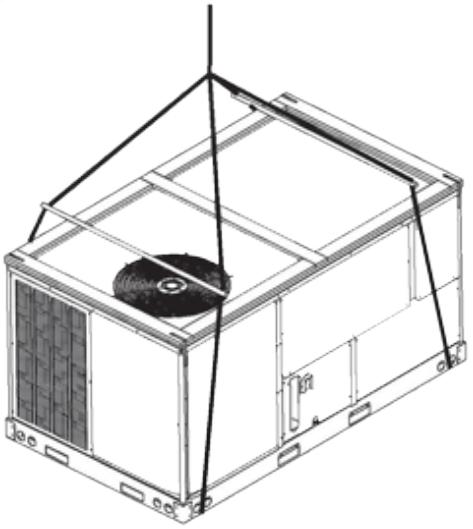

Provisions for forks have been included in the unit base frame. No other fork locations are approved.

- Unit must be lifted by the four lifting holes located at the base frame corners.
- Lifting cables should be attached to the unit with shackles.
- The distance between the crane hook and the top of the unit must not be less than 60".
- Two spreader bars must span over the unit to prevent damage to the cabinet by the lift cables. Spreader bars must be of sufficient length so that cables do not come in contact with the unit during transport. Remove wood struts mounted beneath unit base frame before setting unit on roof curb. These struts are intended to protect unit base frame from fork lift damage. To remove the struts, extract the sheet metal retainers and pull the struts through the base of the unit. Refer to rigging label on the unit.

Important: If using bottom discharge with roof curb, duct-work should be attached to the curb prior to installing the unit. Duct-work dimensions are shown in Roof Curb Installation Instructions Manual.

Refer to the Roof Curb Installation Instructions for proper curb installation. Curbing must be installed in compliance with the National Roofing Contractors Association Manual.

Lower unit carefully onto roof mounting curb. While rigging the unit, the center of gravity will cause the condenser end to be lower than the supply air end.

Bring condenser end of unit into alignment with the curb. With condenser end of the unit resting on curb member and using curb as a fulcrum, lower opposite end of the unit until entire unit is seated on the curb. When a rectangular cantilever curb is used, take care to center the unit. Check for proper alignment and orientation of supply and return openings with duct.

To assist in determining rigging requirements, unit weights are shown below.

Corner & Center-of-Gravity Locations

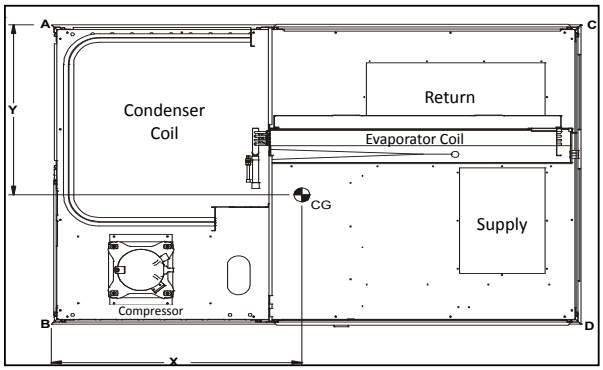

Model	X (in)	Y (in)	Shipping Weight (lbs)	Operating Weight (lbs)	Corner Weights (lbs.)			
					A	B	C	D
DTG036045*DXXX	39.1	26.1	553	526	194	81	39	212
DTG036090*DXXX	38.3	26.3	564	536	174	100	60	202
DTG048090*DXXX	41.4	26.7	599	568	193	121	50	204
DTG048115*DXXX	38.8	27.2	597	569	156	138	81	194
DTG060090*DXXX	41	27.2	638	609	146	188	108	167
DTG060140*DXXX	46.4	28.1	655	629	186	204	65	174

Curb installations must comply with local codes and should follow the established guidelines of the National Roofing Contractors Association.

Proper unit installation requires that the roof curb be firmly and permanently attached to the roof structure. Check for adequate fastening method prior to setting the unit on the curb.

Full perimeter roof curbs are available from the factory and are shipped unassembled. The installing contractor is responsible for field assembly, squaring, leveling, and mounting on the roof structure. All required hardware necessary for the assembly of the sheet metal curb is included in the curb accessory package.

- Determine sufficient structural support before locating and mounting the curb and package unit.
- Duct-work must be constructed using industry guidelines. The duct-work must be placed into the roof curb before mounting the package unit. Our full perimeter curbs include duct connection frames to be assembled with the curb. Cantilevered-type curbs are not available from the factory.
- Contractor furnishes curb insulation, cant strips, flashing, and general roofing material.
- Support curbs on parallel sides with roof members. To prevent damage to the unit, the roof members cannot penetrate supply and return duct openings.

Note: The unit and curb accessories are designed to allow Down Shot duct installation before unit placement. Duct installation after unit placement is not recommended.

See the manual shipped with the roof curb for assembly and installation instructions.

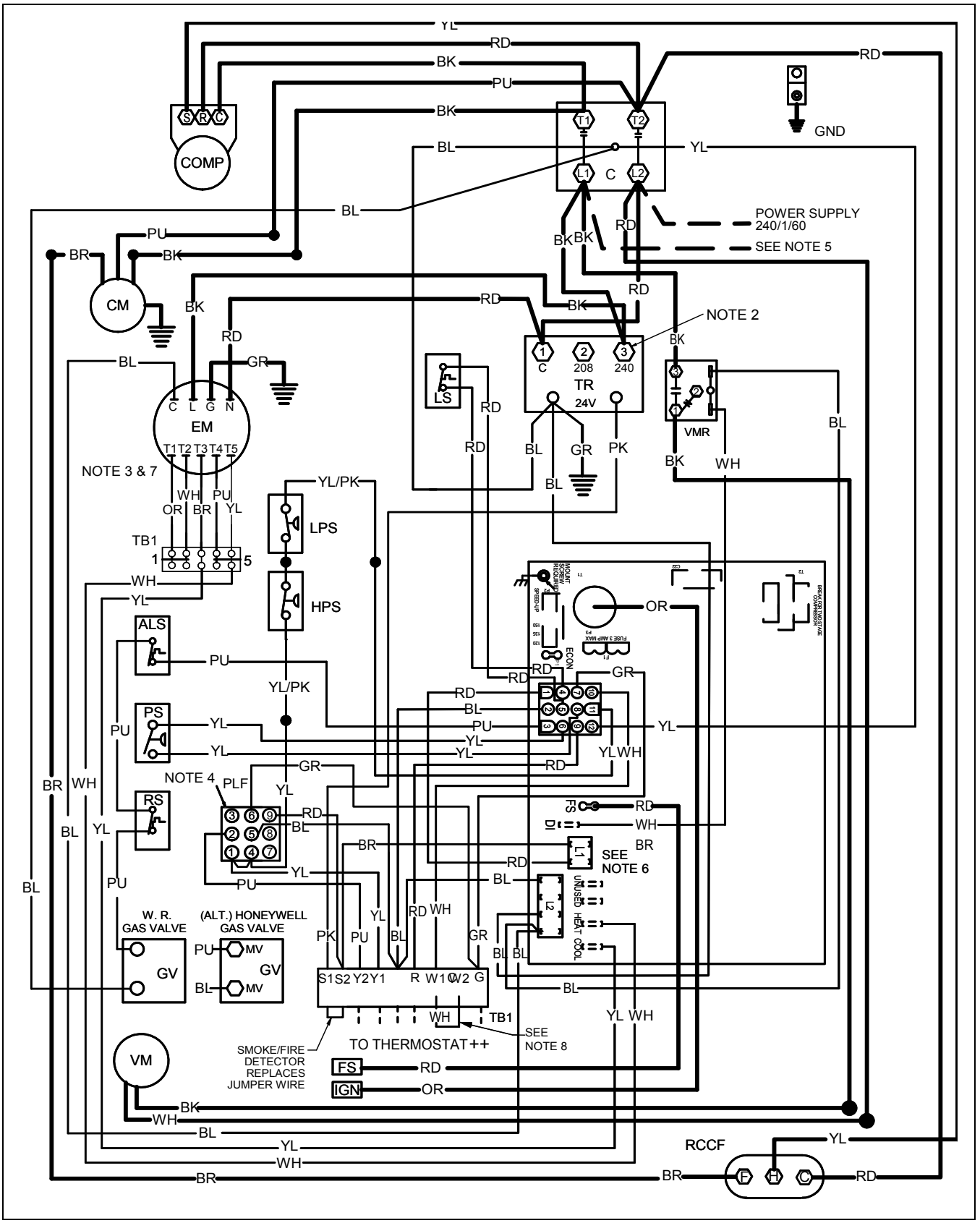

Wiring is subject to change. Always refer to the wiring diagram on the unit for the most up-to-date wiring.

⚠ WARNING — *High Voltage:* Disconnect all power before servicing or installing this unit. Multiple power sources may be present. Failure to do so may cause property damage, personal injury, or death. ⚡

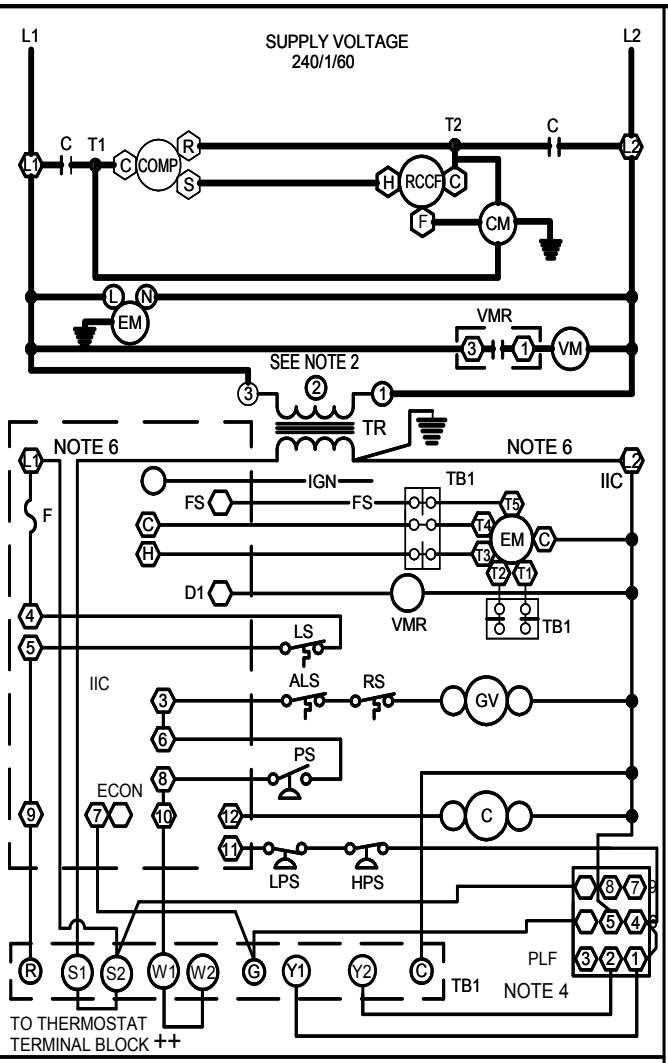

COMPONENT LEGEND

ALS	AUXILIARY LIMIT SWITCH
COMP	COMPRESSOR
CM	CONDENSER MOTOR
C	CONTACTOR
EM	EVAPORATOR MOTOR
F	FUSE
FS	FLAME SENSOR
GND	EQUIPMENT GROUND
GV	GAS VALVE
HPS	HIGH PRESSURE SWITCH
IIC	INTEGRATED IGNITION CONTROL
IGN	IGNITOR
LPS	LOW PRESSURE SWITCH
LS	LIMIT SWITCH
PLF	FEMALE PLUG/CONNECTOR
PS	PRESSURE SWITCH
RCCF	RUN CAPACITOR FOR COMPRESSOR/FAN
RS	ROLLOUT SWITCH
TB1	TERMINAL BLOCK (24V SIGNAL)
TR	TRANSFORMER
VM	VENT MOTOR
VMR	VENT MOTOR RELAY

NOTES

1. REPLACEMENT WIRE MUST BE THE SAME SIZE AND TYPE OF INSULATION AS ORIGINAL. (USE COPPER CONDUCTOR ONLY).
2. FOR 208 VOLT TRANSFORMER OPERATION MOVE BLACK WIRE FROM TERMINAL 3 TO TERMINAL 2 ON TRANSFORMER.
3. FOR DIFFERENT THAN FACTORY SPEED TAP. CHANGE COOLING SPEED AT MOTOR T4 AND T5 TERMINALS. CHANGE HEATING SPEED AT MOTOR T1. T2, AND T3 TERMINALS

   COOLING SPEED (YELLOW WIRE)
   T3 - LOW SPEED
   T4 - HIGH SPEED

   HEATING SPEED (WHITE WIRE)
   T1 - LOW SPEED (070)
   T2 - MED. SPEED
   T5 - HIGH SPEED (140)
4. ACCESSORY ECONOMIZER PLUG ADJACENT TO BLOWER HOUSING IN RETURN AIR COMPARTMENT. REMOVE MALE PLUG AND ATTACH FEMALE PLUG TO ECONOMIZER ACCESSORY.
5. USE COPPER CONDUCTORS ONLY.
   ++ USE NEC CLASS 2 WIRE.
6. L1 AND L2 ON ICC CONTROL IS 24V INPUT.
7. SPEED TAP TERMINATIONS SHOWN ON DIAGRAM ARE REPRESENTATIVE, BUT ACTUAL FACTORY SETTINGS MAY BE DIFFERENT BASED ON THE HEATING VALUE OF THE UNIT.
8. FOR LOW STAGE OPERATION ONLY, REMOVE WHITE JUMPER. FOR 2 STAGE OPERATION, REMOVE JUMPER AND CONNECT W2 TO W2 ON THERMOSTAT.

SEE UNIT RATING PLATE FOR TYPE AND SIZE OF OVER CURRENT PROTECTION .

FACTORY WIRING
- LINE VOLTAGE
- LOW VOLTAGE
- OPTIONAL HIGH VOLTAGE
- OPTIONAL LOW VOLTAGE

FIELD WIRING
- HIGH VOLTAGE
- LOW VOLTAGE

WIRE CODE

BK	BLACK
BL	BLUE
BR	BROWN
GR	GREEN
OR	ORANGE
PK	PINK
PU	PURPLE
RD	RED
WH	WHITE
YL	YELLOW
BL/PK	BLUE WITH PINK STRIP
YL/PK	YELLOW WITH PINK STRIP

THERMOSTAT FIELD WIRING ++

NO ECONOMIZER

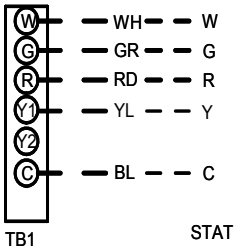

WITH ECONOMIZER OPTION

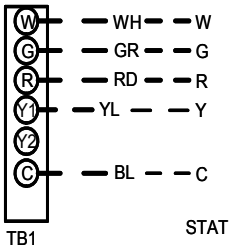

2 STAGE COOLING

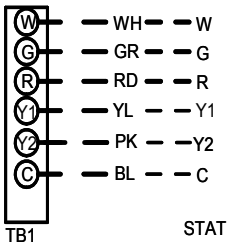

JUNCTION TERMINAL		EQUIPMENT GROUND	
INTERNAL TO INTEGRATED CONTROL		FIELD GROUND	
PLUG CONNECTION		FIELD SPLICE	
SWITCH (PRESS.)		SWITCH (TEMP)	
OVERCURRENT PROT. DEVICE		IGNITER	

240/1/60 0140L04817-A

INSTALLER/SERVICEMAN

THE STATUS LIGHT ON THE FURNACE CONTROL MAY BE USED AS A GUIDE TO TROUBLESHOOTING THIS APPLIANCE. STATUS LIGHT CODES ARE AS FOLLOWS:

STATUS LIGHT	EQUIP. STATUS	CHECK
ON	NORMAL OPERATION	-
OFF	NO POWER OR INTERNAL CONTROL FAULT	CHECK INPUT POWER CHECK FUSE ON CONTROL REPLACE CONTROL
1 BLINK	IGNITION FAILURE OR OPEN ROLLOUT SWITCH OR OPEN AUX. LIMIT SWITCH	GAS FLOW GAS PRESSURE GAS VALVE FLAME SENSOR FLAME ROLLOUT BAD SWITCH AUX. LIMIT OPEN
2 BLINKS	PRESSURE SWITCH OPEN	CHECK PRESSURE SWITCH
3 BLINKS	PRESSURE SWITCH CLOSED WITHOUT INDUCER ON	CHECK PRESSURE SWITCH
4 BLINKS	OPEN LIMIT SWITCH	MAIN LIMIT OPEN BAD SWITCH
5 BLINKS	FALSE FLAME SENSED	STICKING GAS VALVE
6 BLINKS	COMPRESSOR OUTPUT DELAY	3 MIN. COMP. ANTI-CYCLE TIMER

Wiring is subject to change. Always refer to the wiring diagram on the unit for the most up-to-date wiring.

⚠ WARNING — *High Voltage:* Disconnect all power before servicing or installing this unit. Multiple power sources may be present. Failure to do so may cause property damage, personal injury, or death. ⚡

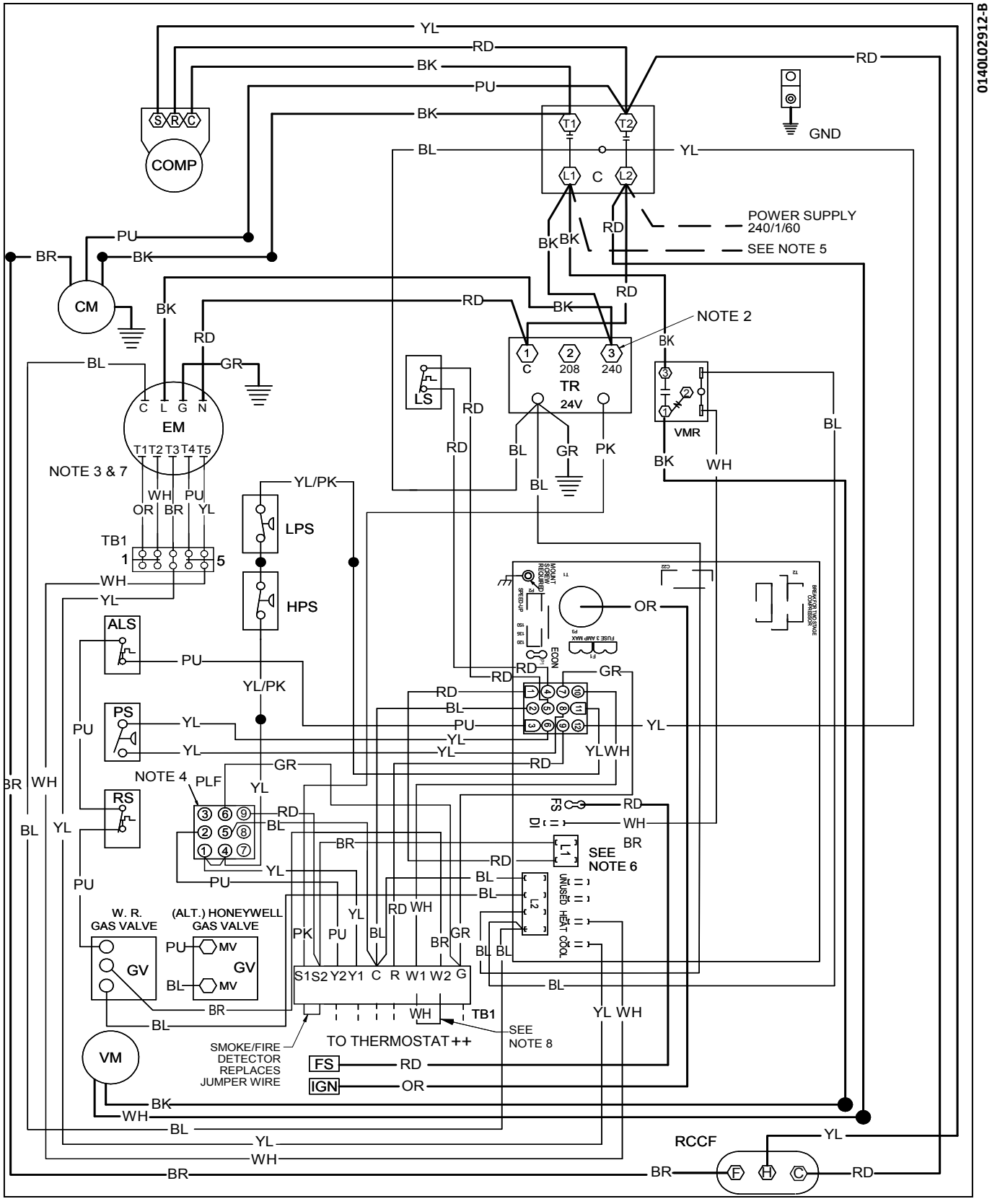

Wiring is subject to change. Always refer to the wiring diagram on the unit for the most up-to-date wiring.

⚠ WARNING — *High Voltage:* Disconnect all power before servicing or installing this unit. Multiple power sources may be present. Failure to do so may cause property damage, personal injury, or death. ⚡

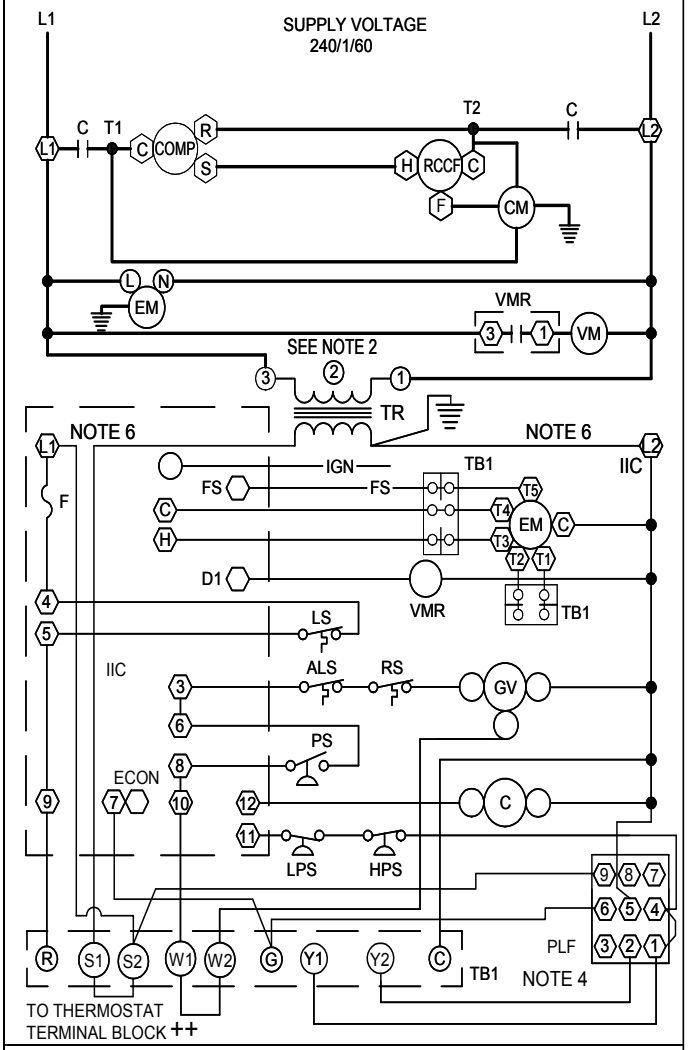

INSTALLER/SERVICEMAN

THE STATUS LIGHT ON THE FURNACE CONTROL MAY BE USED AS A GUIDE TO TROUBLESHOOTING THIS APPLIANCE. STATUS LIGHT CODES ARE AS FOLLOWS:

STATUS LIGHT	EQUIP. STATUS	CHECK
ON	NORMAL OPERATION	-
OFF	NO POWER OR INTERNAL CONTROL FAULT	CHECK INPUT POWER CHECK FUSE ON CONTROL REPLACE CONTROL
1 BLINK	IGNITION FAILURE OR OPEN ROLLOUT SWITCH OR OPEN AUX. LIMIT SWITCH	GAS FLOW GAS PRESSURE GAS VALVE FLAME SENSOR FLAME ROLLOUT BAD SWITCH AUX. LIMIT OPEN
2 BLINKS	PRESSURE SWITCH OPEN	CHECK PRESSURE SWITCH
3 BLINKS	PRESSURE SWITCH CLOSED WITHOUT INDUCER ON	CHECK PRESSURE SWITCH
4 BLINKS	OPEN LIMIT SWITCH	MAIN LIMIT OPEN BAD SWITCH
5 BLINKS	FALSE FLAME SENSED	STICKING GAS VALVE
6 BLINKS	COMPRESSOR OUTPUT DELAY	3 MIN. COMP. ANTI-CYCLE TIMER

COMPONENT LEGEND

ALS	AUXILIARY LIMIT SWITCH
COMP	COMPRESSOR
CM	CONDENSER MOTOR
C	CONTACTOR
EM	EVAPORATOR MOTOR
F	FUSE
FS	FLAME SENSOR
GND	EQUIPMENT GROUND
GV	GAS VALVE
HPS	HIGH PRESSURE SWITCH
IIC	INTEGRATED IGNITION CONTROL
IGN	IGNITOR
LPS	LOW PRESSURE SWITCH
LS	LIMIT SWITCH
PLF	FEMALE PLUG/CONNECTOR
PS	PRESSURE SWITCH
RCCF	RUN CAPACITOR FOR COMPRESSOR/FAN
RS	ROLLOUT SWITCH
TB1	TERMINAL BLOCK (24V SIGNAL)
TR	TRANSFORMER
VM	VENT MOTOR
VMR	VENT MOTOR RELAY

NOTES

1. REPLACEMENT WIRE MUST BE THE SAME SIZE AND TYPE OF INSULATION AS ORIGINAL. (USE COPPER CONDUCTOR ONLY).
2. FOR 208 VOLT TRANSFORMER OPERATION MOVE BLACK WIRE FROM TERMINAL 3 TO TERMINAL 2 ON TRANSFORMER.
3. FOR DIFFERENT THAN FACTORY SPEED TAP. CHANGE COOLING SPEED AT MOTOR T4 AND T5 TERMINALS. CHANGE HEATING SPEED AT MOTOR T1. T2, AND T3 TERMINALS

   COOLING SPEED (YELLOW WIRE)
   T3 - LOW SPEED
   T4 - HIGH SPEED

   HEATING SPEED (WHITE WIRE)
   T1 - LOW SPEED (070)
   T2 - MED. SPEED
   T5 - HIGH SPEED (140)
4. ACCESSORY ECONOMIZER PLUG ADJACENT TO BLOWER HOUSING IN RETURN AIR COMPARTMENT. REMOVE MALE PLUG AND ATTACH FEMALE PLUG TO ECONOMIZER ACCESSORY.
5. USE COPPER CONDUCTORS ONLY.
   ++ USE NEC CLASS 2 WIRE.
6. L1 AND L2 ON ICC CONTROL IS 24V INPUT.
7. SPEED TAP TERMINATIONS SHOWN ON DIAGRAM ARE REPRESENTATIVE, BUT ACTUAL FACTORY SETTINGS MAY BE DIFFERENT BASED ON THE HEATING VALUE OF THE UNIT.
8. FOR LOW STAGE OPERATION ONLY, REMOVE WHITE JUMPER. FOR 2 STAGE OPERATION, REMOVE JUMPER AND CONNECT W2 TO W2 ON THERMOSTAT.

SEE UNIT RATING PLATE FOR TYPE AND SIZE OF OVER CURRENT PROTECTION .

JUNCTION TERMINAL	EQUIPMENT GROUND
INTERNAL TO INTEGRATED CONTROL	FIELD GROUND
PLUG CONNECTION	FIELD SPLICE
SWITCH (PRESS.)	SWITCH (TEMP)
OVERCURRENT PROT. DEVICE	IGNITER

240/1/60 0140L02912-B

FACTORY WIRING
- LINE VOLTAGE
- LOW VOLTAGE
- OPTIONAL HIGH VOLTAGE
- OPTIONAL LOW VOLTAGE

FIELD WIRING
- HIGH VOLTAGE
- LOW VOLTAGE

WIRE CODE

BK	BLACK
BL	BLUE
BR	BROWN
GR	GREEN
OR	ORANGE
PK	PINK
PU	PURPLE
RD	RED
WH	WHITE
YL	YELLOW
BL/PK	BLUE WITH PINK STRIP
YL/PK	YELLOW WITH PINK STRIP

THERMOSTAT FIELD WIRING ++

NO ECONOMIZER

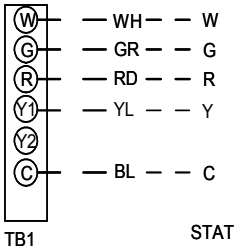

WITH ECONOMIZER OPTION

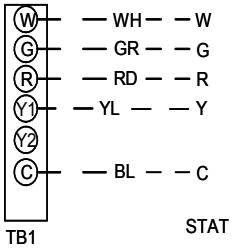

2 STAGE COOLING

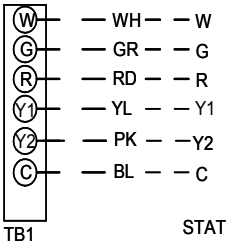

Wiring is subject to change. Always refer to the wiring diagram on the unit for the most up-to-date wiring.

⚠ WARNING — *High Voltage:* Disconnect all power before servicing or installing this unit. Multiple power sources may be present. Failure to do so may cause property damage, personal injury, or death. ⚡

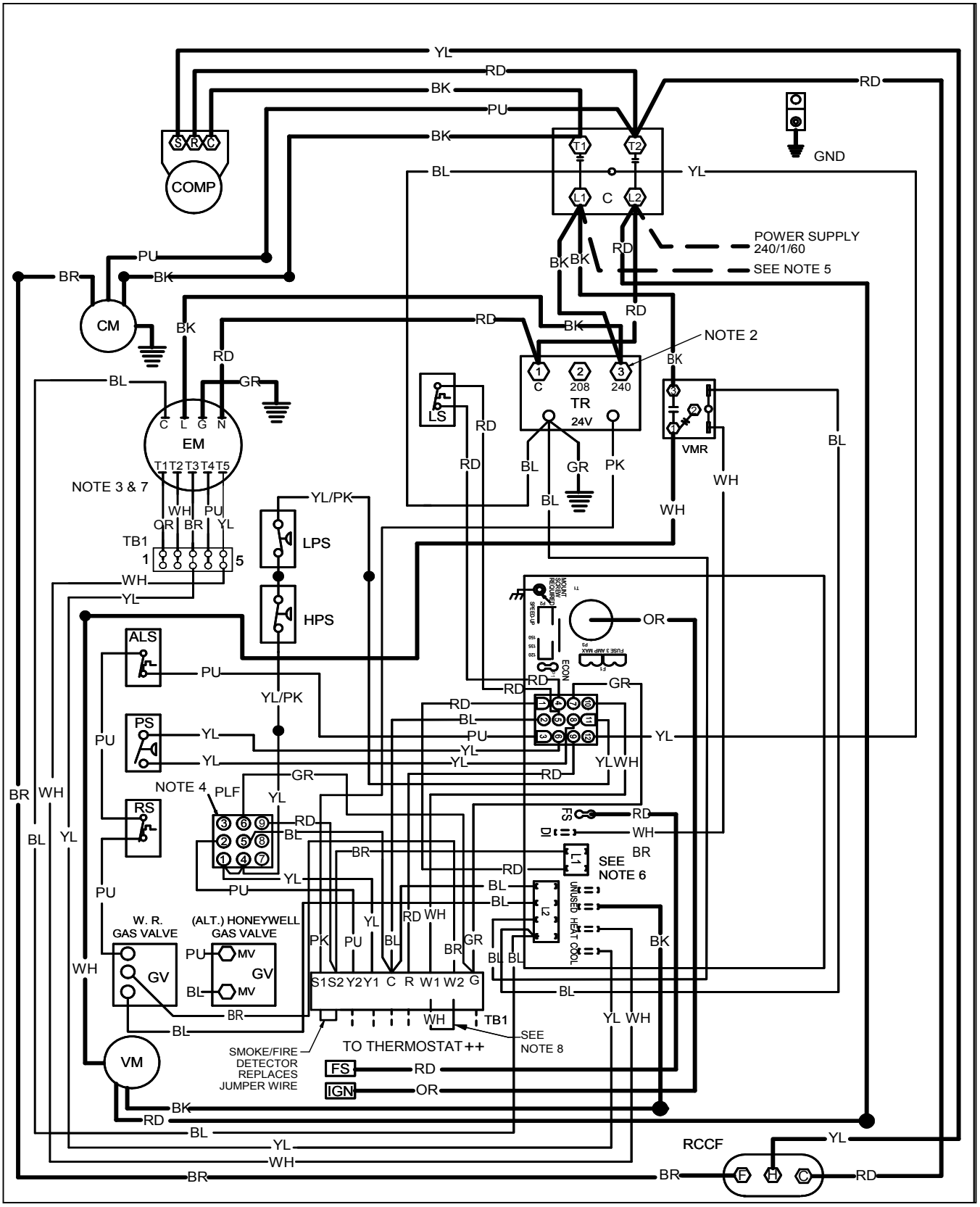

Wiring is subject to change. Always refer to the wiring diagram on the unit for the most up-to-date wiring.

⚠ *WARNING*	*High Voltage:* Disconnect all power before servicing or installing this unit. Multiple power sources may be present. Failure to do so may cause property damage, personal injury, or death. ⚡

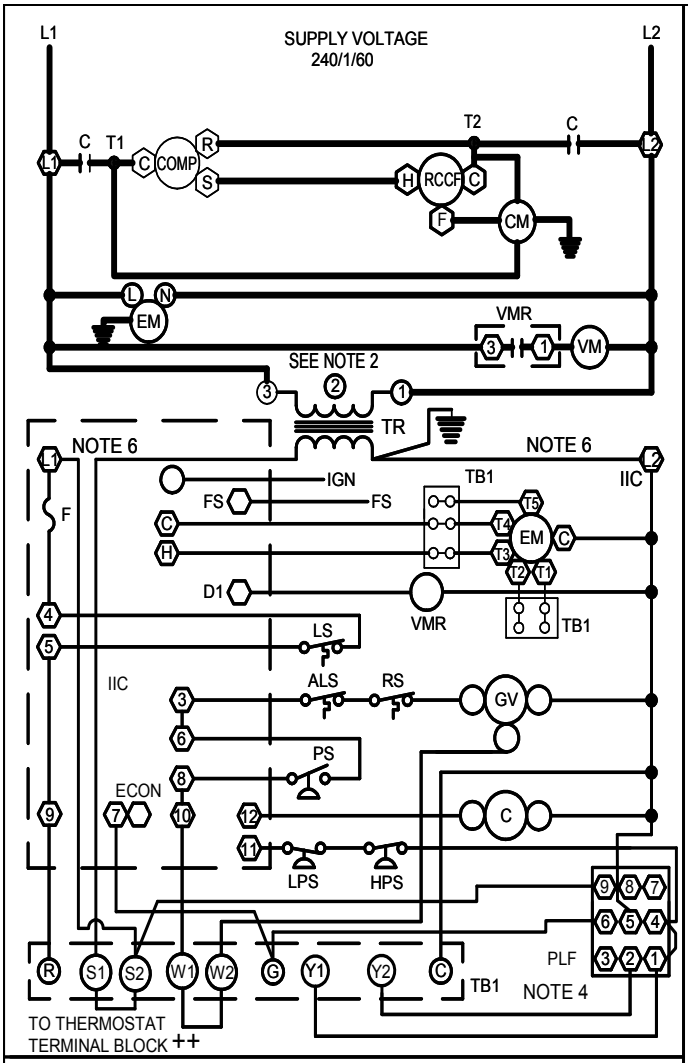

COMPONENT LEGEND

ALS	AUXILIARY LIMIT SWITCH
COMP	COMPRESSOR
CM	CONDENSER MOTOR
C	CONTACTOR
EM	EVAPORATOR MOTOR
F	FUSE
FS	FLAME SENSOR
GND	EQUIPMENT GROUND
GV	GAS VALVE
HPS	HIGH PRESSURE SWITCH
IIC	INTEGRATED IGNITION CONTROL
IGN	IGNITOR
LPS	LOW PRESSURE SWITCH
LS	LIMIT SWITCH
PLF	FEMALE PLUG/CONNECTOR
PS	PRESSURE SWITCH
RCCF	RUN CAPACITOR FOR COMPRESSOR/FAN
RS	ROLLOUT SWITCH
TB1	TERMINAL BLOCK (24V SIGNAL)
TR	TRANSFORMER
VM	VENT MOTOR
VMR	VENT MOTOR RELAY

NOTES

1. REPLACEMENT WIRE MUST BE THE SAME SIZE AND TYPE OF INSULATION AS ORIGINAL. (USE COPPER CONDUCTOR ONLY).
2. FOR 208 VOLT TRANSFORMER OPERATION MOVE BLACK WIRE FROM TERMINAL 3 TO TERMINAL 2 ON TRANSFORMER.
3. FOR DIFFERENT THAN FACTORY SPEED TAP. CHANGE COOLING SPEED AT MOTOR T4 AND T5 TERMINALS. CHANGE HEATING SPEED AT MOTOR T1. T2, AND T3 TERMINALS

   COOLING SPEED (YELLOW WIRE)

   T3 - LOW SPEED

   T4 - HIGH SPEED

   HEATING SPEED (WHITE WIRE)

   T1 - LOW SPEED (070)

   T2 - MED. SPEED

   T5 - HIGH SPEED (140)
4. ACCESSORY ECONOMIZER PLUG ADJACENT TO BLOWER HOUSING IN RETURN AIR COMPARTMENT. REMOVE MALE PLUG AND ATTACH FEMALE PLUG TO ECONOMIZER ACCESSORY.
5. USE COPPER CONDUCTORS ONLY.
   ++ USE NEC CLASS 2 WIRE.
6. L1 AND L2 ON ICC CONTROL IS 24V INPUT.
7. SPEED TAP TERMINATIONS SHOWN ON DIAGRAM ARE REPRESENTATIVE, BUT ACTUAL FACTORY SETTINGS MAY BE DIFFERENT BASED ON THE HEATING VALUE OF THE UNIT.
8. FOR LOW STAGE OPERATION ONLY, REMOVE WHITE JUMPER. FOR 2 STAGE OPERATION, REMOVE JUMPER AND CONNECT W2 TO W2 ON THERMOSTAT.

SEE UNIT RATING PLATE FOR TYPE AND SIZE OF OVER CURRENT PROTECTION .

JUNCTION
TERMINAL
INTERNAL TO INTEGRATED CONTROL
PLUG CONNECTION
SWITCH (PRESS.)
OVERCURRENT PROT. DEVICE
EQUIPMENT GROUND
FIELD GROUND
FIELD SPLICE
SWITCH (TEMP)
IGNITER

240/1/60 0140L04818-A

FACTORY WIRING

LINE VOLTAGE
LOW VOLTAGE
OPTIONAL HIGH VOLTAGE
OPTIONAL LOW VOLTAGE

FIELD WIRING

HIGH VOLTAGE
LOW VOLTAGE

WIRE CODE

BK	BLACK
BL	BLUE
BR	BROWN
GR	GREEN
OR	ORANGE
PK	PINK
PU	PURPLE
RD	RED
WH	WHITE
YL	YELLOW
BL/PK	BLUE WITH PINK STRIP
YL/PK	YELLOW WITH PINK STRIP

THERMOSTAT FIELD WIRING ++

NO ECONOMIZER

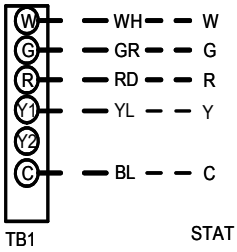

WITH ECONOMIZER OPTION

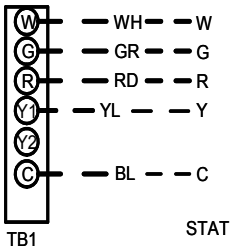

2 STAGE COOLING

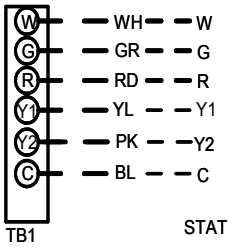

INSTALLER/SERVICEMAN

THE STATUS LIGHT ON THE FURNACE CONTROL MAY BE USED AS A GUIDE TO TROUBLESHOOTING THIS APPLIANCE. STATUS LIGHT CODES ARE AS FOLLOWS:

STATUS LIGHT	EQUIP. STATUS	CHECK
ON	NORMAL OPERATION	-
OFF	NO POWER OR INTERNAL CONTROL FAULT	CHECK INPUT POWER CHECK FUSE ON CONTROL REPLACE CONTROL
1 BLINK	IGNITION FAILURE OR OPEN ROLLOUT SWITCH OR OPEN AUX. LIMIT SWITCH	GAS FLOW GAS PRESSURE GAS VALVE FLAME SENSOR FLAME ROLLOUT BAD SWITCH AUX. LIMIT OPEN
2 BLINKS	PRESSURE SWITCH OPEN	CHECK PRESSURE SWITCH
3 BLINKS	PRESSURE SWITCH CLOSED WITHOUT INDUCER ON	CHECK PRESSURE SWITCH
4 BLINKS	OPEN LIMIT SWITCH	MAIN LIMIT OPEN BAD SWITCH
5 BLINKS	FALSE FLAME SENSED	STICKING GAS VALVE
6 BLINKS	COMPRESSOR OUTPUT DELAY	3 MIN. COMP. ANTI-CYCLE TIMER

Wiring is subject to change. Always refer to the wiring diagram on the unit for the most up-to-date wiring.

⚠ WARNING — *High Voltage:* Disconnect all power before servicing or installing this unit. Multiple power sources may be present. Failure to do so may cause property damage, personal injury, or death. ⚡

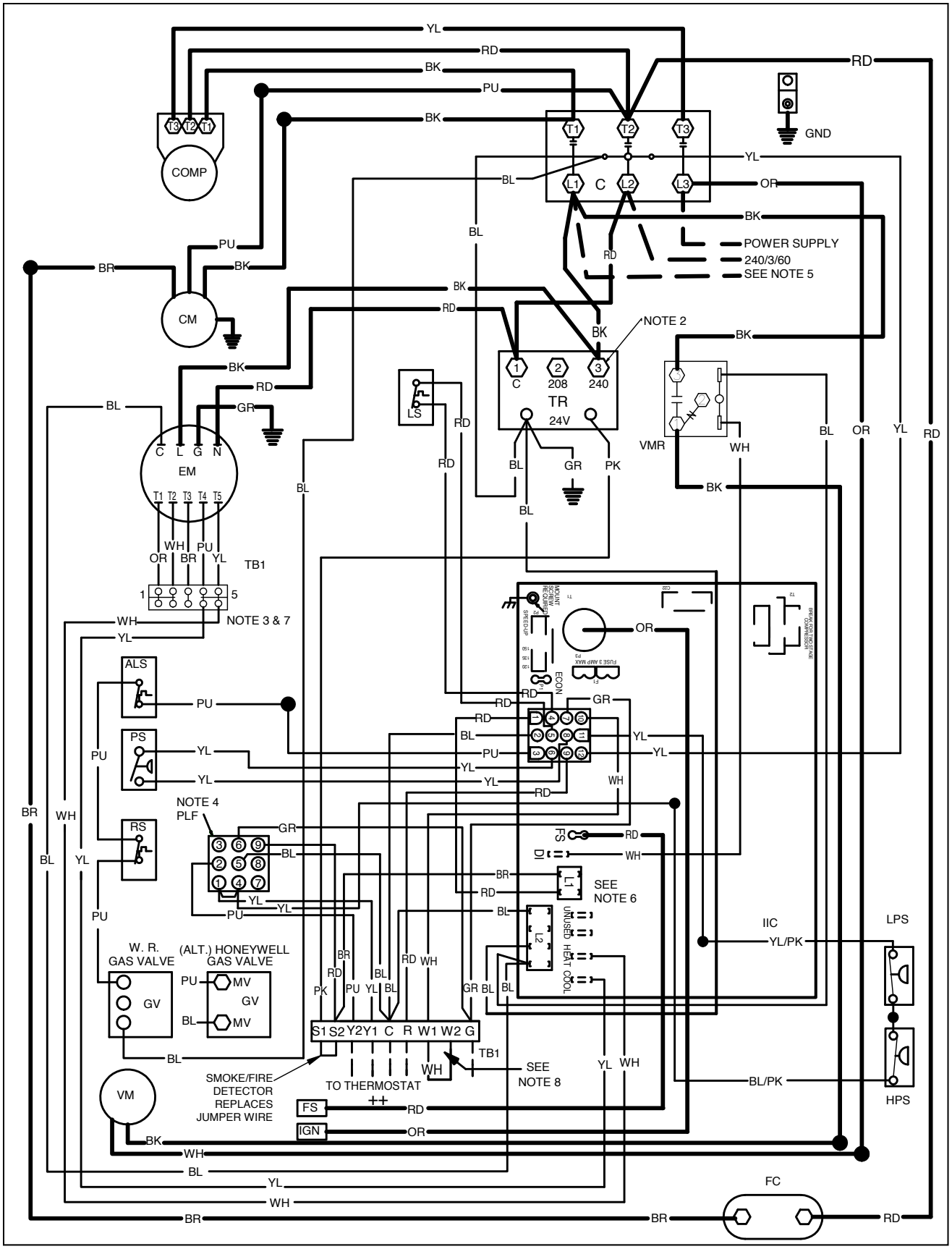

Wiring is subject to change. Always refer to the wiring diagram on the unit for the most up-to-date wiring.

⚠ *WARNING*	*High Voltage:* Disconnect all power before servicing or installing this unit. Multiple power sources may be present. Failure to do so may cause property damage, personal injury, or death. ⚡

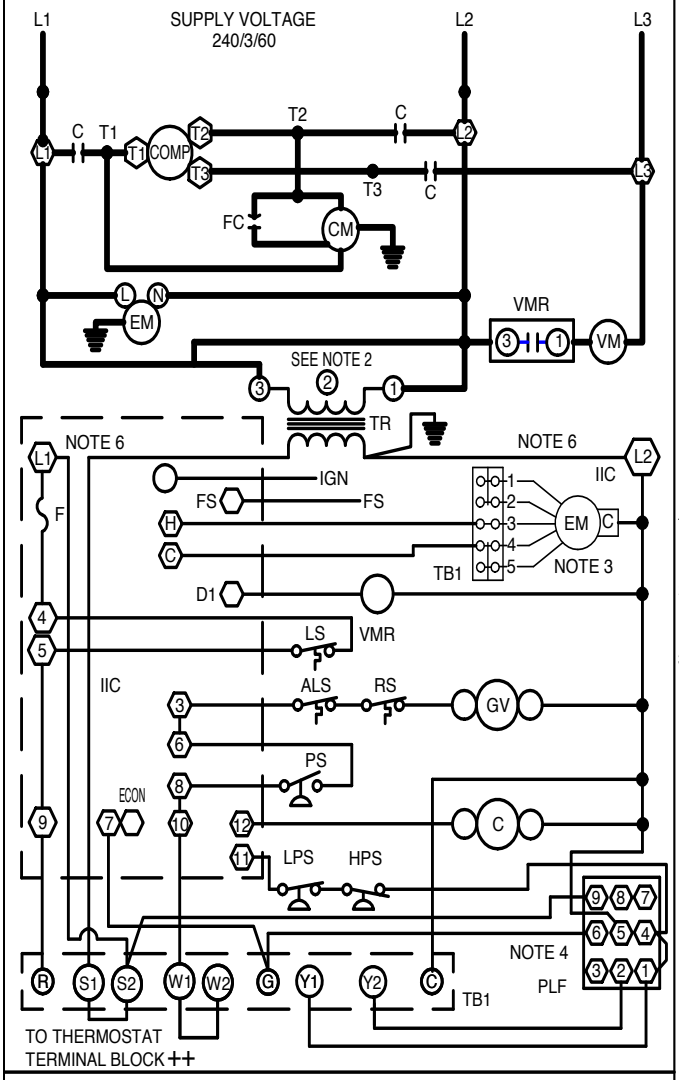

COMPONENT LEGEND

ALS	AUXILIARY LIMIT SWITCH
COMP	COMPRESSOR
CM	CONDENSER MOTOR
C	CONTACTOR
EM	EVAPORATOR MOTOR
F	FUSE
FC	FAN CAPACITOR
FS	FLAME SENSOR
GND	EQUIPMENT GROUND
GV	GAS VALVE
HPS	HIGH PRESSURE SWITCH
IIC	INTEGRATED IGNITION CONTROL
IGN	IGNITOR
LS	LIMIT SWITCH
LPS	LOW PRESSURE SWITCH
PLF	FEMALE PLUG/CONNECTOR
PS	PRESSURE SWITCH
RS	ROLLOUT SWITCH
TB1	TERMINAL BLOCK (24V SIGNAL)
TR	TRANSFORMER
VM	VENT MOTOR
VMR	VENT MOTOR RELAY

NOTES

1. REPLACEMENT WIRE MUST BE THE SAME SIZE AND TYPE OF INSULATION AS ORIGINAL. (USE COPPER CONDUCTOR ONLY).
2. FOR 208 VOLT TRANSFORMER OPERATION MOVE BLACK WIRES FROM TERMINAL (3) TO TERMINAL (2) ON TRANSFORMER.
3. FOR DIFFERENT THAN FACTORY SPEED TAP. CHANGE COOLING SPEED AT MOTOR T3 AND T4 TERMINALS. CHANGE HEATING SPEED AT MOTOR T1. T2, AND T5 TERMINALS

   COOLING SPEED (YELLOW WIRE)
   - T3 - LOW SPEED
   - T4 - HIGH SPEED

   HEATING SPEED (WHITE WIRE)
   - T1 - LOW SPEED (070)
   - T2 - MED. SPEED
   - T5 - HIGH SPEED (140)
4. ACCESSORY ECONOMIZER PLUG ADJACENT TO BLOWER HOUSING IN RETURN AIR COMPARTMENT. REMOVE MALE PLUG AND ATTACH FEMALE PLUG TO ECONOMIZER ACCESSORY.
5. USE COPPER CONDUCTORS ONLY.
   ++ USE NEC CLASS 2 WIRE.
6. L1 AND L2 ON ICC CONTROL IS 24V INPUT.
7. SPEED TAP TERMINATIONS SHOWN ON DIAGRAM ARE REPRESENTATIVE, BUT ACTUAL FACTORY SETTINGS MAY BE DIFFERENT BASED ON THE HEATING VALUE OF THE UNIT.
8. FOR LOW STAGE OPERATION ONLY, REMOVE WHITE JUMPER. FOR 2 STAGE OPERATION, REMOVE JUMPER AND CONNECT W2 TO W2 ON THERMOSTAT.

SEE UNIT RATING PLATE FOR TYPE AND SIZE OF OVER CURRENT PROTECTION

JUNCTION		EQUIPMENT GROUND	
TERMINAL		FIELD GROUND	
INTERNAL TO INTEGRATED CONTROL		FIELD SPLICE	
PLUG CONNECTION		SWITCH (TEMP)	
SWITCH (PRESS.)		IGNITER	
OVERCURRENT PROT. DEVICE			

FACTORY WIRING
- LINE VOLTAGE
- LOW VOLTAGE

FIELD WIRING
- HIGH VOLTAGE
- LOW VOLTAGE

WIRE CODE

BK	BLACK
BL	BLUE
BR	BROWN
GR	GREEN
OR	ORANGE
PK	PINK
PU	PURPLE
RD	RED
WH	WHITE
YL	YELLOW
BL/PK	BLUE WITH PINK STRIP
YL/PK	YELLOW WITH PINK STRIP

THERMOSTAT ++ FIELD WIRING

NO ECONOMIZER

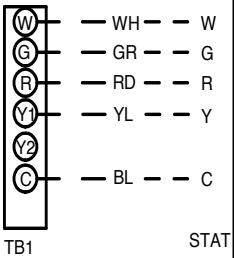

WITH ECONOMIZER OPTION

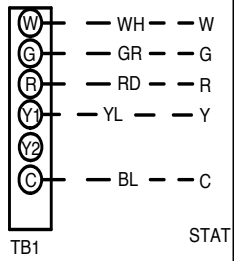

2 STAGE COOLING

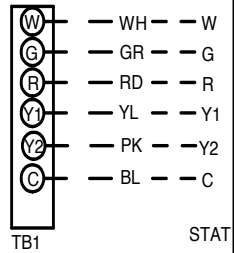

INSTALLER/SERVICEMAN

THE STATUS LIGHT ON THE FURNACE CONTROL MAY BE USED AS A GUIDE TO TROUBLESHOOTING THIS APPLIANCE. STATUS LIGHT CODES ARE AS FOLLOWS:

STATUS LIGHT	EQUIP. STATUS	CHECK
ON	NORMAL OPERATION	-
OFF	NO POWER OR INTERNAL CONTROL FAULT	CHECK INPUT POWER CHECK FUSE ON CONTROL REPLACE CONTROL
1 BLINK	IGNITION FAILURE OR OPEN ROLLOUT SWITCH OR OPEN AUX. LIMIT SWITCH	GAS FLOW GAS PRESSURE GAS VALVE FLAME SENSOR FLAME ROLLOUT BAD SWITCH AUX. LIMIT OPEN
2 BLINKS	PRESSURE SWITCH OPEN	CHECK PRESSURE SWITCH
3 BLINKS	PRESSURE SWITCH CLOSED WITHOUT INDUCER ON	CHECK PRESSURE SWITCH
4 BLINKS	OPEN LIMIT SWITCH	MAIN LIMIT OPEN BAD SWITCH
5 BLINKS	FALSE FLAME SENSED	STICKING GAS VALVE
6 BLINKS	COMPRESSOR OUTPUT DELAY	3 MIN. COMP. ANTI-CYCLE TIMER

230/3/60 0140L05108-A

Wiring is subject to change. Always refer to the wiring diagram on the unit for the most up-to-date wiring.

⚠ WARNING — *High Voltage:* Disconnect all power before servicing or installing this unit. Multiple power sources may be present. Failure to do so may cause property damage, personal injury, or death. ⚡

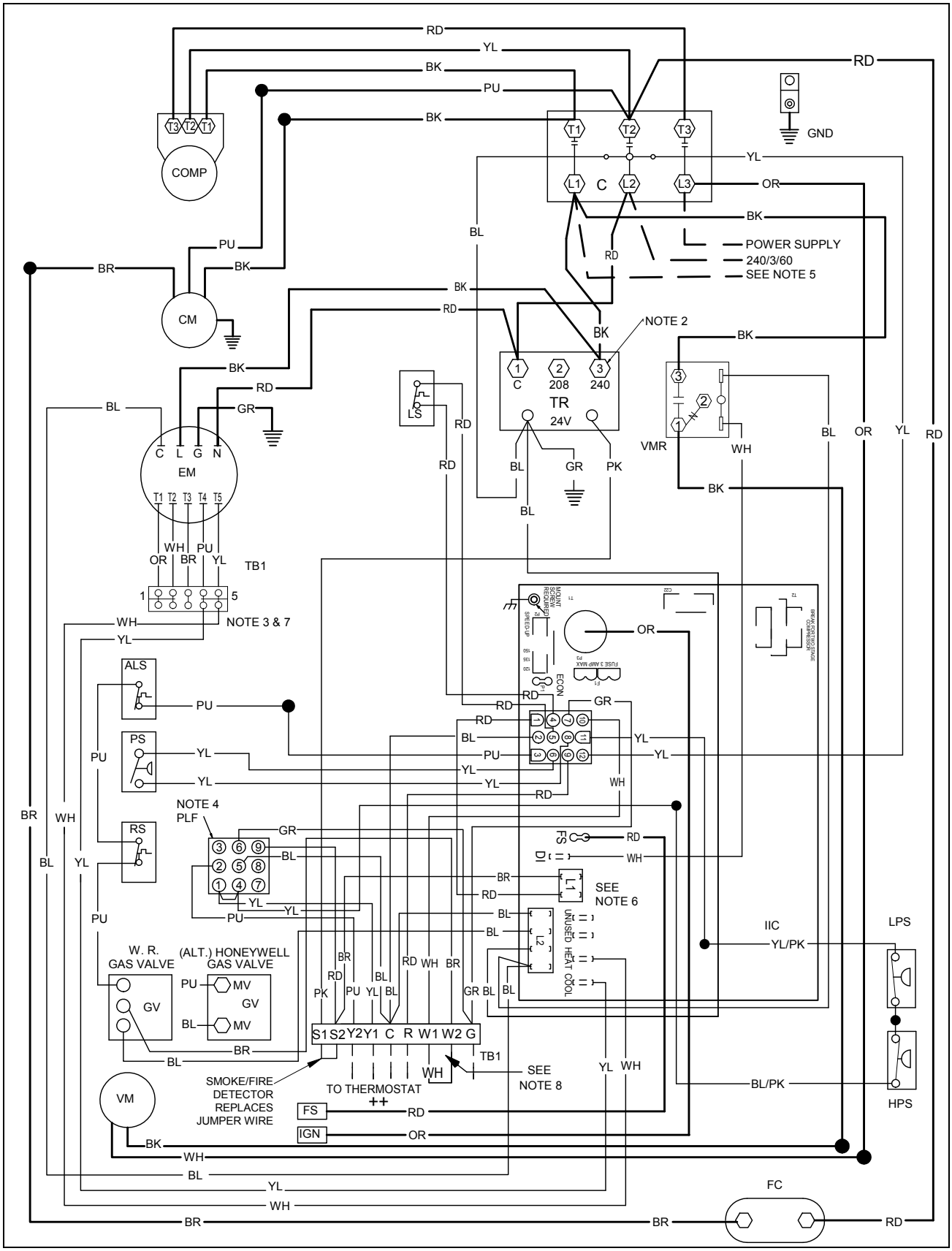
0140L02913-B
COMP
CM
EM
TB1
NOTE 3 & 7
ALS
PS
RS
NOTE 4
PLF
W. R.
GAS VALVE
(ALT.) HONEYWELL
GAS VALVE
GV
MV
VM
SMOKE/FIRE
DETECTOR
REPLACES
JUMPER WIRE
TO THERMOSTAT
++
S1 S2 Y2 Y1 C R W1 W2 G
SEE
NOTE 8
FS
IGN
C
208
240
TR
24V
LS
NOTE 2
POWER SUPPLY
240/3/60
SEE NOTE 5
GND
VMR
ECON
SEE
NOTE 6
UNUSED HEAT COOL
IIC
LPS
HPS
FC

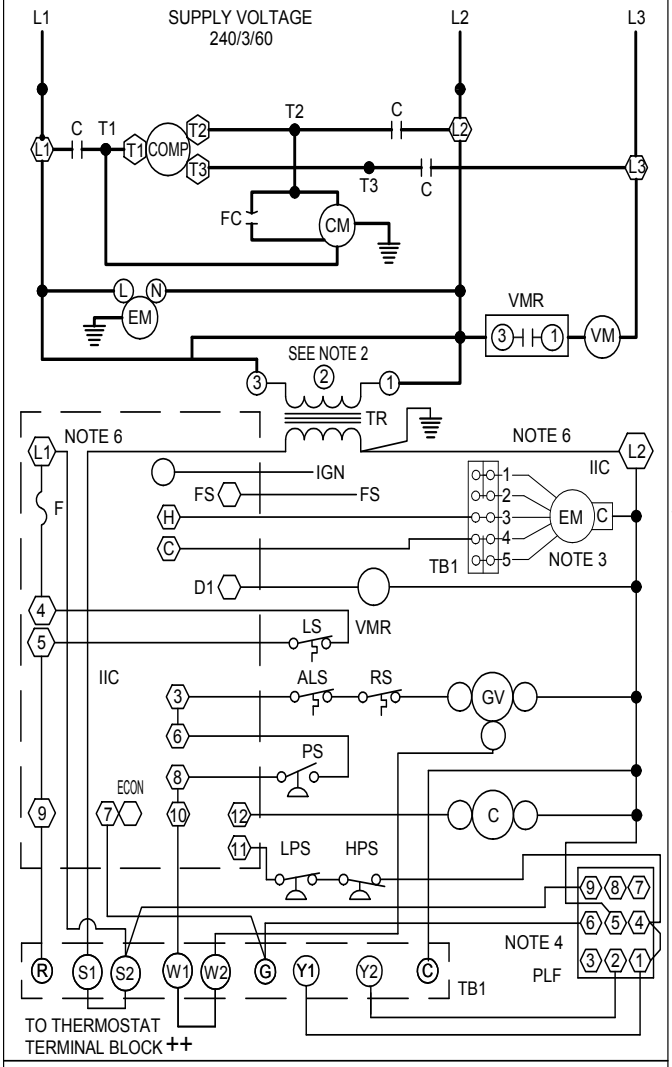

INSTALLER/SERVICEMAN

THE STATUS LIGHT ON THE FURNACE CONTROL MAY BE USED AS A GUIDE TO TROUBLESHOOTING THIS APPLIANCE. STATUS LIGHT CODES ARE AS FOLLOWS:

STATUS LIGHT	EQUIP. STATUS	CHECK
ON	NORMAL OPERATION	-
OFF	NO POWER OR INTERNAL CONTROL FAULT	CHECK INPUT POWER CHECK FUSE ON CONTROL REPLACE CONTROL
1 BLINK	IGNITION FAILURE OR OPEN ROLLOUT SWITCH OR OPEN AUX. LIMIT SWITCH	GAS FLOW GAS PRESSURE GAS VALVE FLAME SENSOR FLAME ROLLOUT BAD SWITCH AUX. LIMIT OPEN
2 BLINKS	PRESSURE SWITCH OPEN	CHECK PRESSURE SWITCH
3 BLINKS	PRESSURE SWITCH CLOSED WITHOUT INDUCER ON	CHECK PRESSURE SWITCH
4 BLINKS	OPEN LIMIT SWITCH	MAIN LIMIT OPEN BAD SWITCH
5 BLINKS	FALSE FLAME SENSED	STICKING GAS VALVE
6 BLINKS	COMPRESSOR OUTPUT DELAY	3 MIN. COMP. ANTI-CYCLE TIMER

COMPONENT LEGEND

ALS	AUXILIARY LIMIT SWITCH
COMP	COMPRESSOR
CM	CONDENSER MOTOR
C	CONTACTOR
EM	EVAPORATOR MOTOR
F	FUSE
FC	FAN CAPACITOR
FS	FLAME SENSOR
GND	EQUIPMENT GROUND
GV	GAS VALVE
HPS	HIGH PRESSURE SWITCH
IIC	INTEGRATED IGNITION CONTROL
IGN	IGNITOR
LS	LIMIT SWITCH
LPS	LOW PRESSURE SWITCH
PLF	FEMALE PLUG/CONNECTOR
PS	PRESSURE SWITCH
RS	ROLLOUT SWITCH
TB1	TERMINAL BLOCK (24V SIGNAL)
TR	TRANSFORMER
VM	VENT MOTOR
VMR	VENT MOTOR RELAY

NOTES

1. REPLACEMENT WIRE MUST BE THE SAME SIZE AND TYPE OF INSULATION AS ORIGINAL. (USE COPPER CONDUCTOR ONLY).
2. FOR 208 VOLT TRANSFORMER OPERATION MOVE BLACK WIRES FROM TERMINAL 3 TO TERMINAL 2 ON TRANSFORMER.
3. FOR DIFFERENT THAN FACTORY SPEED TAP. CHANGE COOLING SPEED AT MOTOR T3 AND T4 TERMINALS. CHANGE HEATING SPEED AT MOTOR T1. T2, AND T5 TERMINALS

   COOLING SPEED (YELLOW WIRE)
   T3 - LOW SPEED
   T4 - HIGH SPEED

   HEATING SPEED (WHITE WIRE)
   T1 - LOW SPEED (070)
   T2 - MED. SPEED
   T5 - HIGH SPEED (140)
4. ACCESSORY ECONOMIZER PLUG ADJACENT TO BLOWER HOUSING IN RETURN AIR COMPARTMENT. REMOVE MALE PLUG AND ATTACH FEMALE PLUG TO ECONOMIZER ACCESSORY.
5. USE COPPER CONDUCTORS ONLY.
   ++ USE NEC CLASS 2 WIRE.
6. L1 AND L2 ON ICC CONTROL IS 24V INPUT.
7. SPEED TAP TERMINATIONS SHOWN ON DIAGRAM ARE REPRESENTATIVE, BUT ACTUAL FACTORY SETTINGS MAY BE DIFFERENT BASED ON THE HEATING VALUE OF THE UNIT.
8. FOR LOW STAGE OPERATION ONLY, REMOVE WHITE JUMPER. FOR 2 STAGE OPERATION, REMOVE JUMPER AND CONNECT W2 TO W2 ON THERMOSTAT.

SEE UNIT RATING PLATE FOR TYPE AND SIZE OF OVER CURRENT PROTECTION

JUNCTION	EQUIPMENT GROUND
TERMINAL	FIELD GROUND
INTERNAL TO INTEGRATED CONTROL	FIELD SPLICE
PLUG CONNECTION	SWITCH (TEMP)
SWITCH (PRESS.)	IGNITER
OVERCURRENT PROT. DEVICE	

230/3/60 0140L02913-B

FACTORY WIRING
LINE VOLTAGE
LOW VOLTAGE
OPTIONAL HIGH VOLTAGE
OPTIONAL LOW VOLTAGE

FIELD WIRING
HIGH VOLTAGE
LOW VOLTAGE

WIRE CODE

BK	BLACK
BL	BLUE
BR	BROWN
GR	GREEN
OR	ORANGE
PK	PINK
PU	PURPLE
RD	RED
WH	WHITE
YL	YELLOW
BL/PK	BLUE WITH PINK STRIP
YL/PK	YELLOW WITH PINK STRIP

THERMOSTAT ++ FIELD WIRING

NO ECONOMIZER

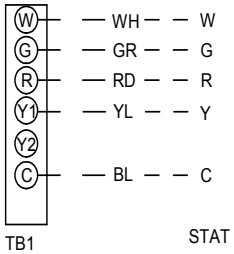

WITH ECONOMIZER OPTION

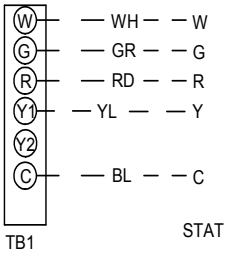

2 STAGE COOLING

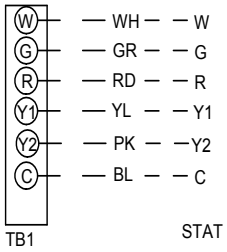

Wiring is subject to change. Always refer to the wiring diagram on the unit for the most up-to-date wiring.

⚠ WARNING *High Voltage:* Disconnect all power before servicing or installing this unit. Multiple power sources may be present. Failure to do so may cause property damage, personal injury, or death. ⚡

WIRING DIAGRAMS FOR MODELS WITH DDC CONTROLS

FOR COMPLETE INFORMATION AND INSTALLATION INSTRUCTIONS FOR MODELS WITH DDC CONTROLS, SEE MANUAL DK-DDC-TGD-XXX

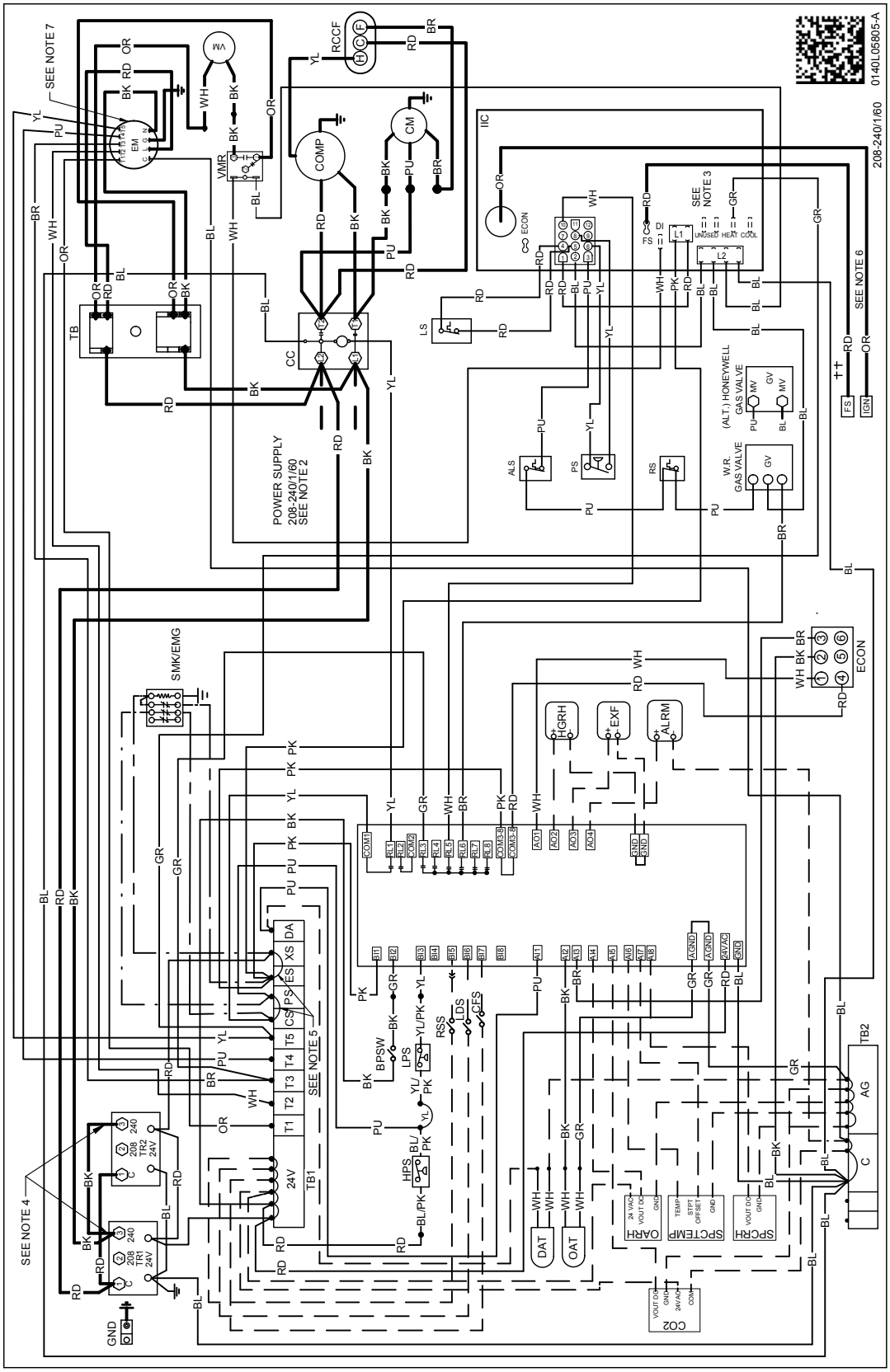

High Voltage: Disconnect all power before servicing or installing this unit. Multiple power sources may be present. Failure to do so may cause property damage, personal injury, or death.

WARNING

Wiring is subject to change. Always refer to the wiring diagram on the unit for the most up-to-date wiring.

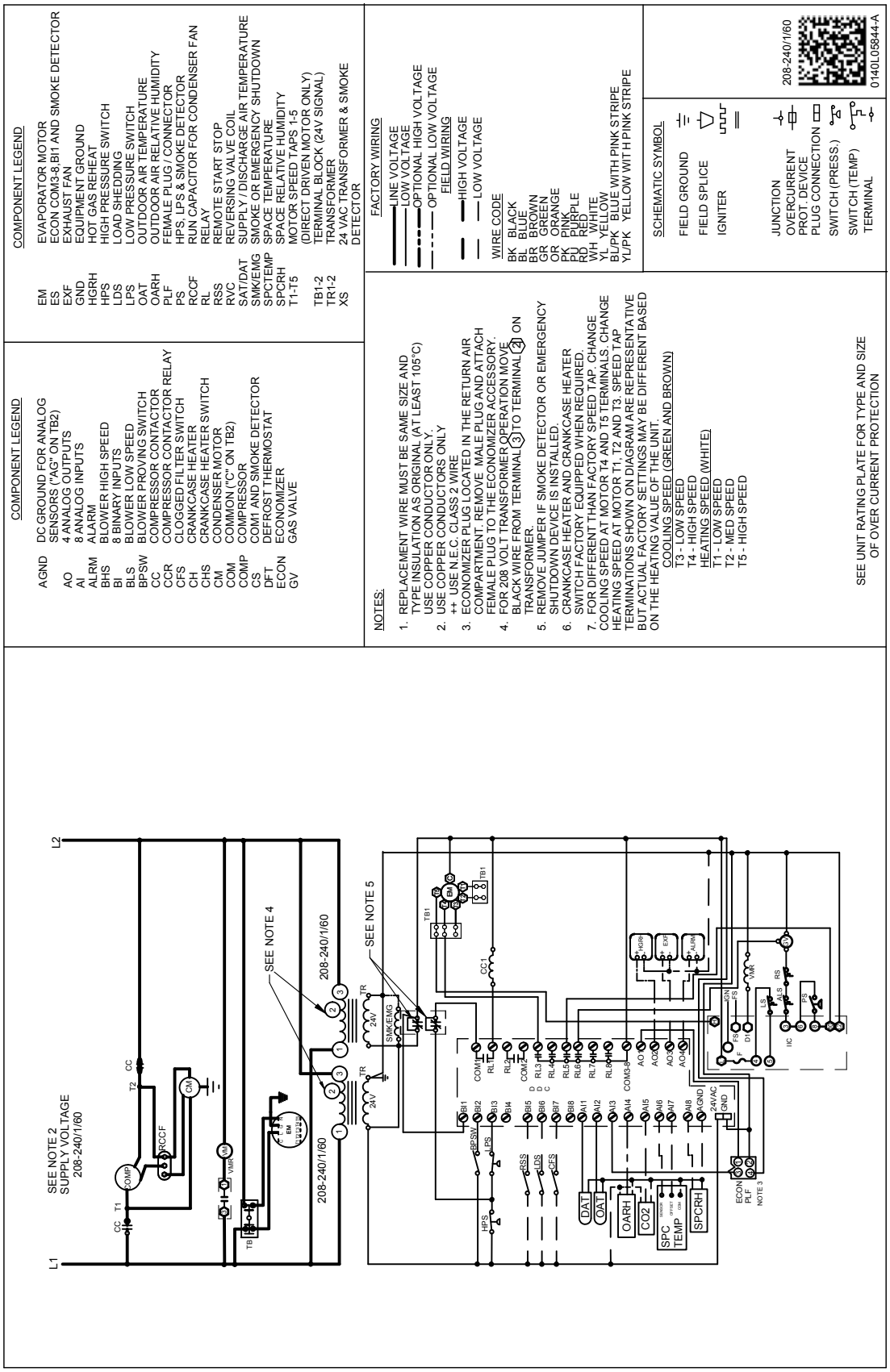

Wiring is subject to change. Always refer to the wiring diagram on the unit for the most up-to-date wiring.

WARNING ***High Voltage:*** Disconnect all power before servicing or installing this unit. Multiple power sources may be present. Failure to do so may cause property damage, personal injury, or death.

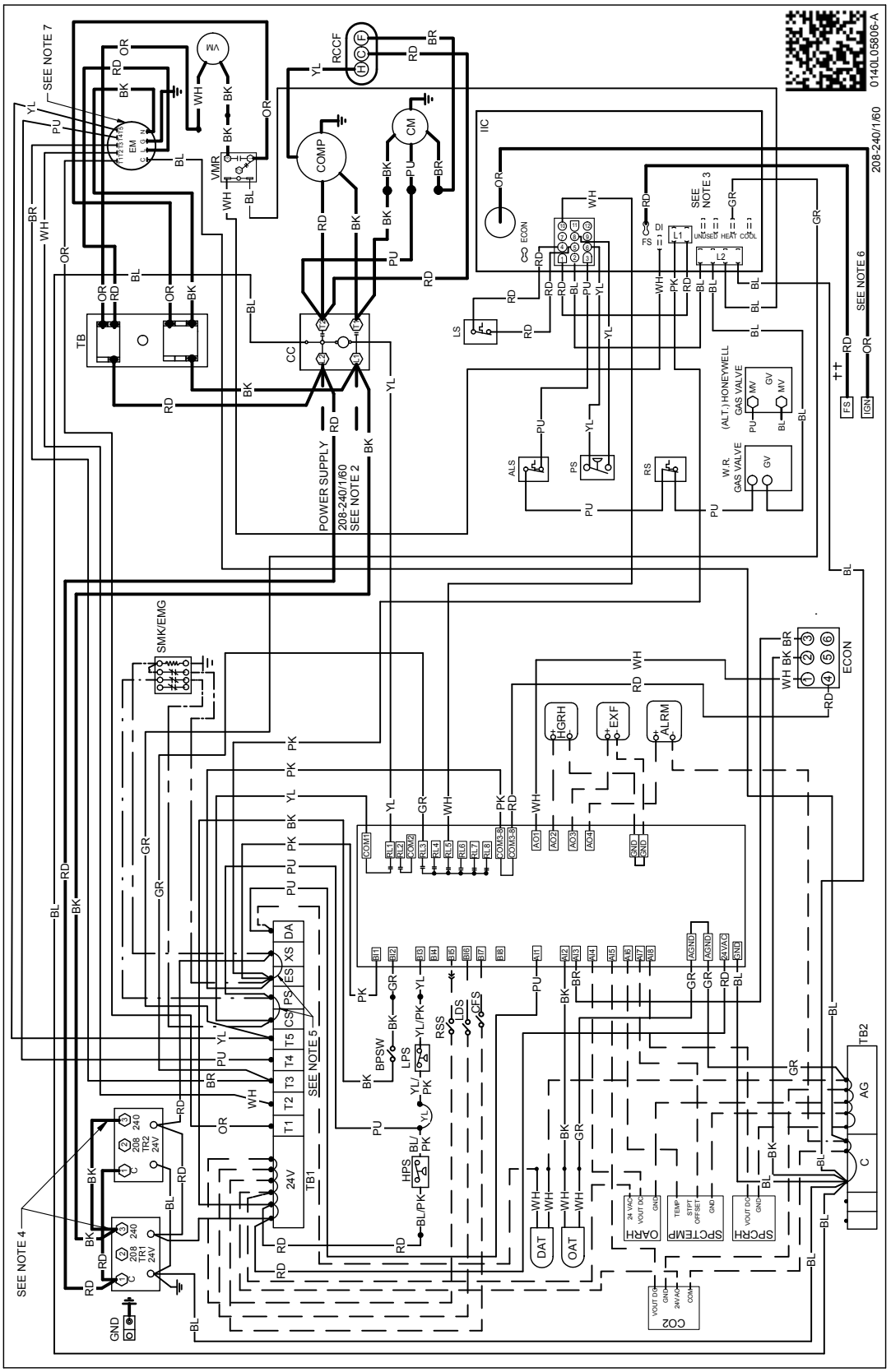

High Voltage: Disconnect all power before servicing or installing this unit. Multiple power sources may be present. Failure to do so may cause property damage, personal injury, or death.

WARNING

Wiring is subject to change. Always refer to the wiring diagram on the unit for the most up-to-date wiring.

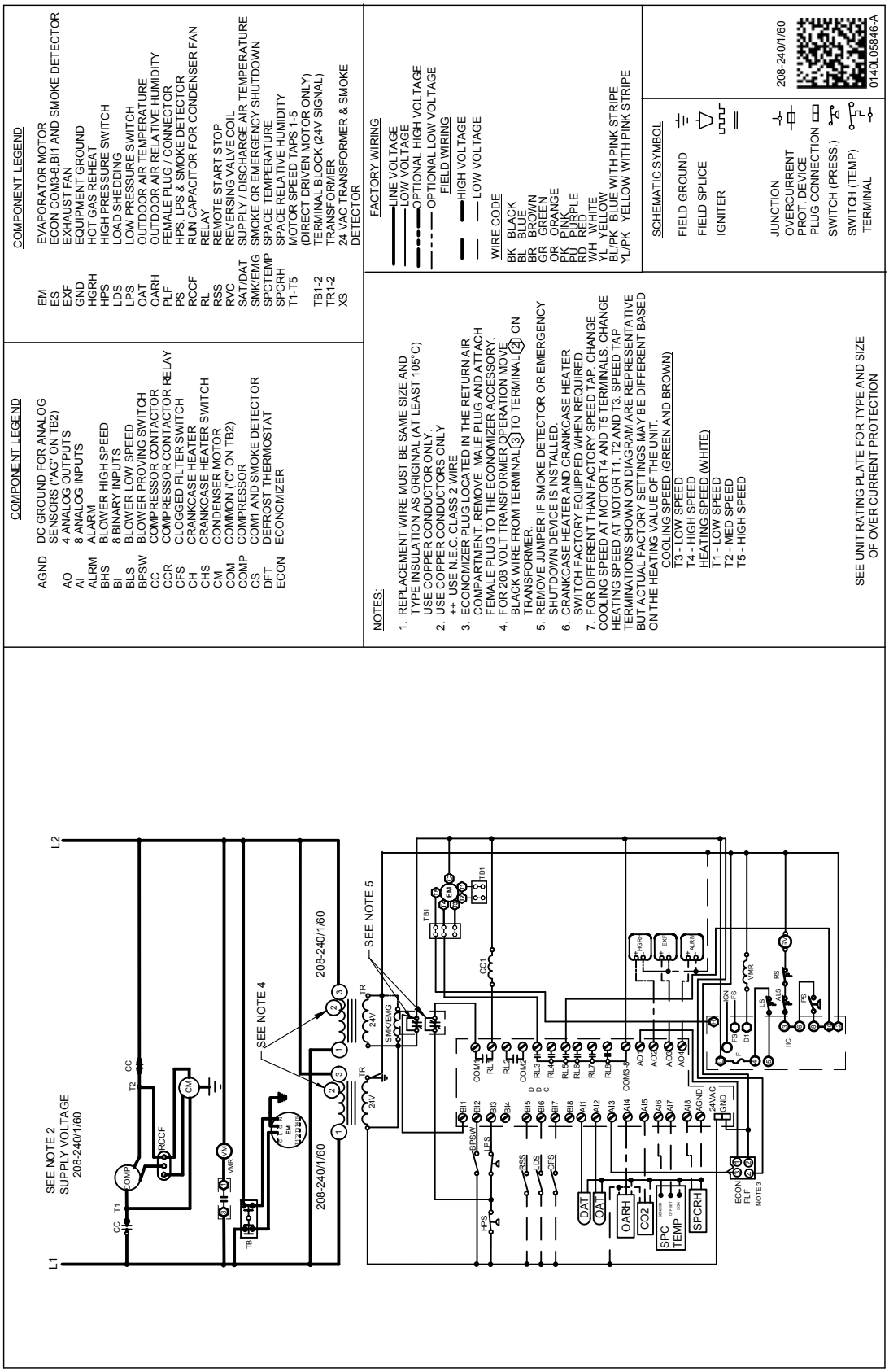

WARNING — ***High Voltage:*** Disconnect all power before servicing or installing this unit. Multiple power sources may be present. Failure to do so may cause property damage, personal injury, or death.

Wiring is subject to change. Always refer to the wiring diagram on the unit for the most up-to-date wiring.

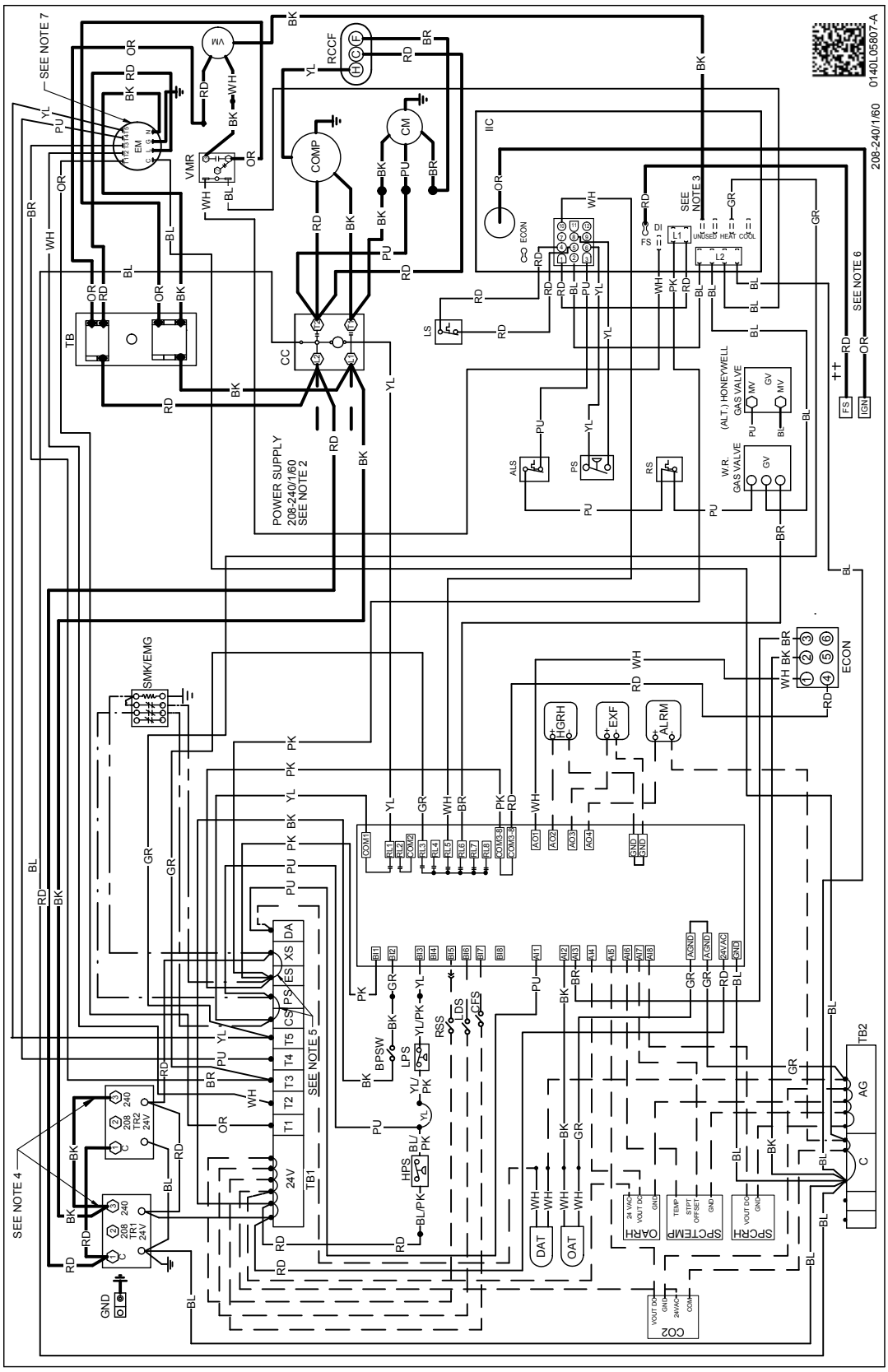

High Voltage: Disconnect all power before servicing or installing this unit. Multiple power sources may be present. Failure to do so may cause property damage, personal injury, or death.

WARNING

Wiring is subject to change. Always refer to the wiring diagram on the unit for the most up-to-date wiring.

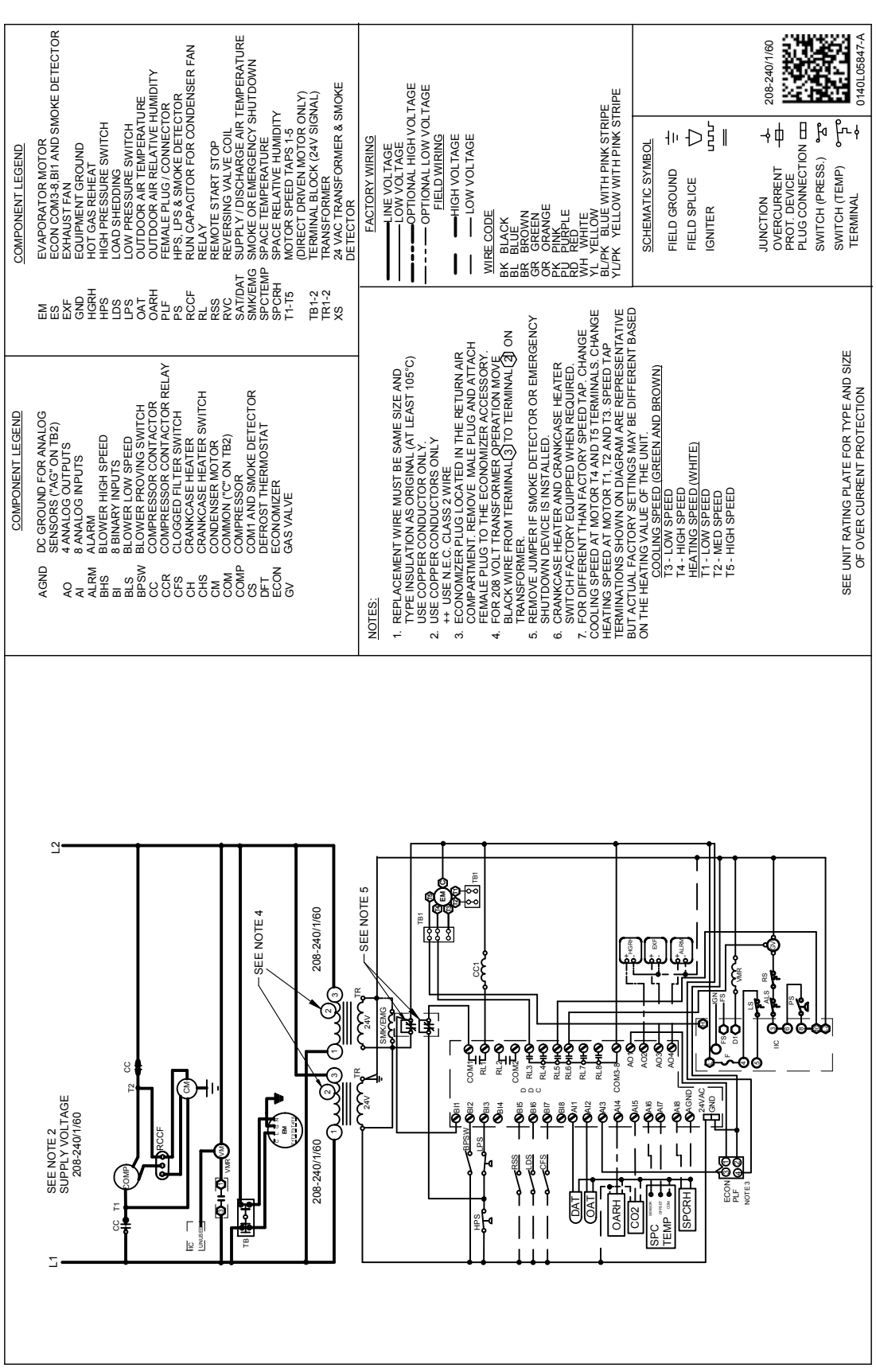

Wiring is subject to change. Always refer to the wiring diagram on the unit for the most up-to-date wiring.

WARNING ***High Voltage:*** Disconnect all power before servicing or installing this unit. Multiple power sources may be present. Failure to do so may cause property damage, personal injury, or death.

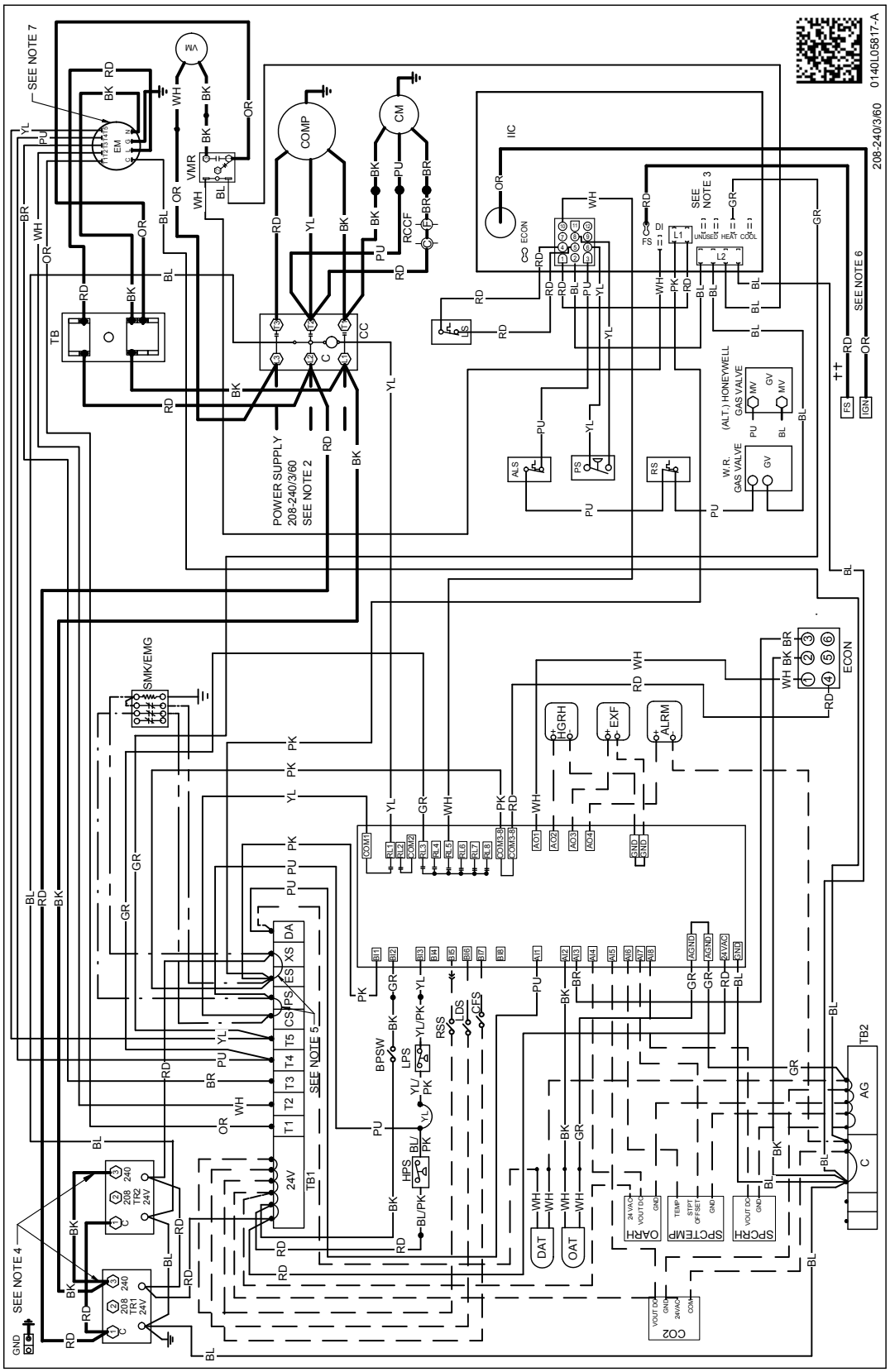

⚠ WARNING — ***High Voltage:*** Disconnect all power before servicing or installing this unit. Multiple power sources may be present. Failure to do so may cause property damage, personal injury, or death.

Wiring is subject to change. Always refer to the wiring diagram on the unit for the most up-to-date wiring.

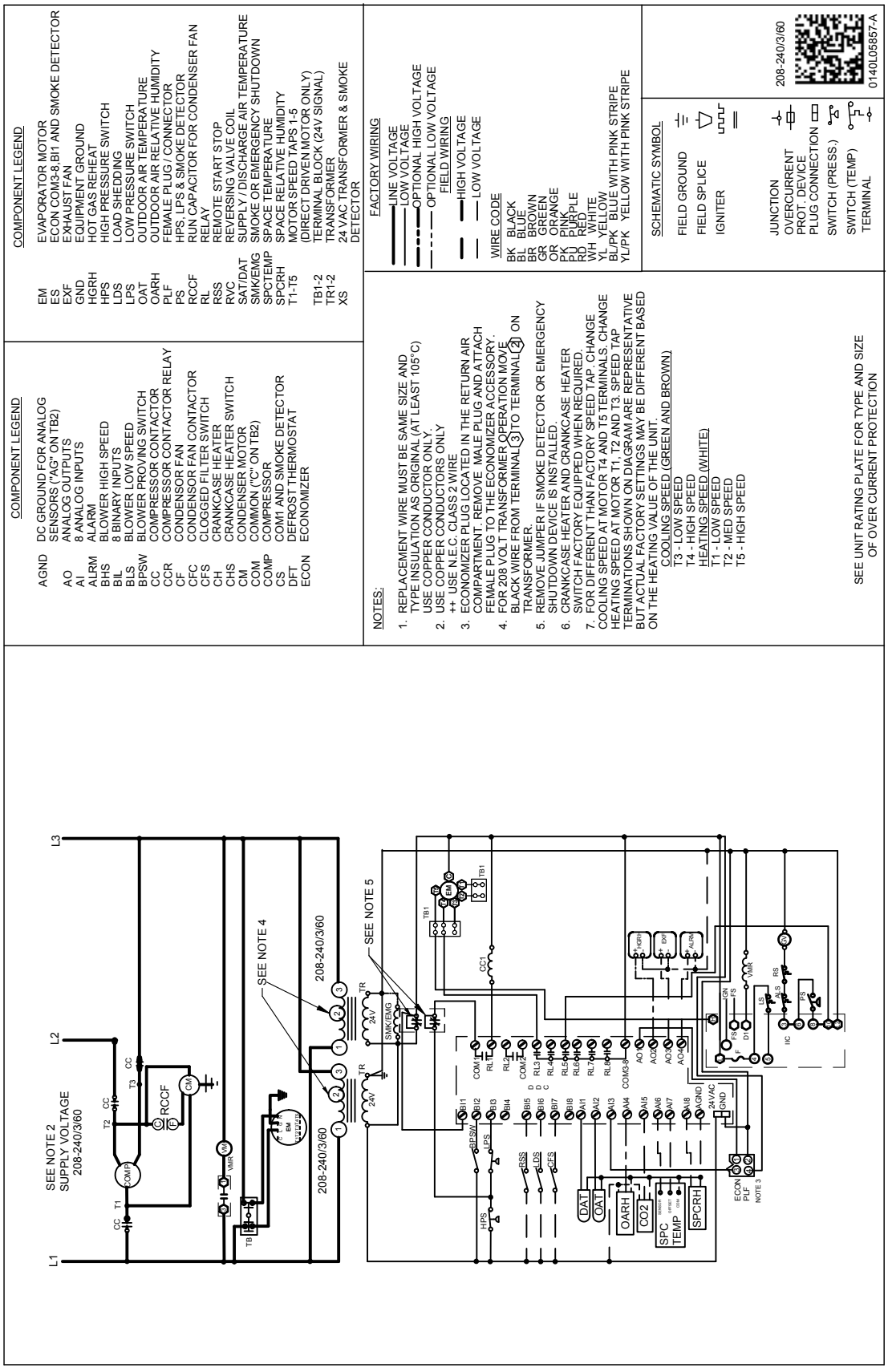

WARNING — ***High Voltage:*** Disconnect all power before servicing or installing this unit. Multiple power sources may be present. Failure to do so may cause property damage, personal injury, or death.

Wiring is subject to change. Always refer to the wiring diagram on the unit for the most up-to-date wiring.

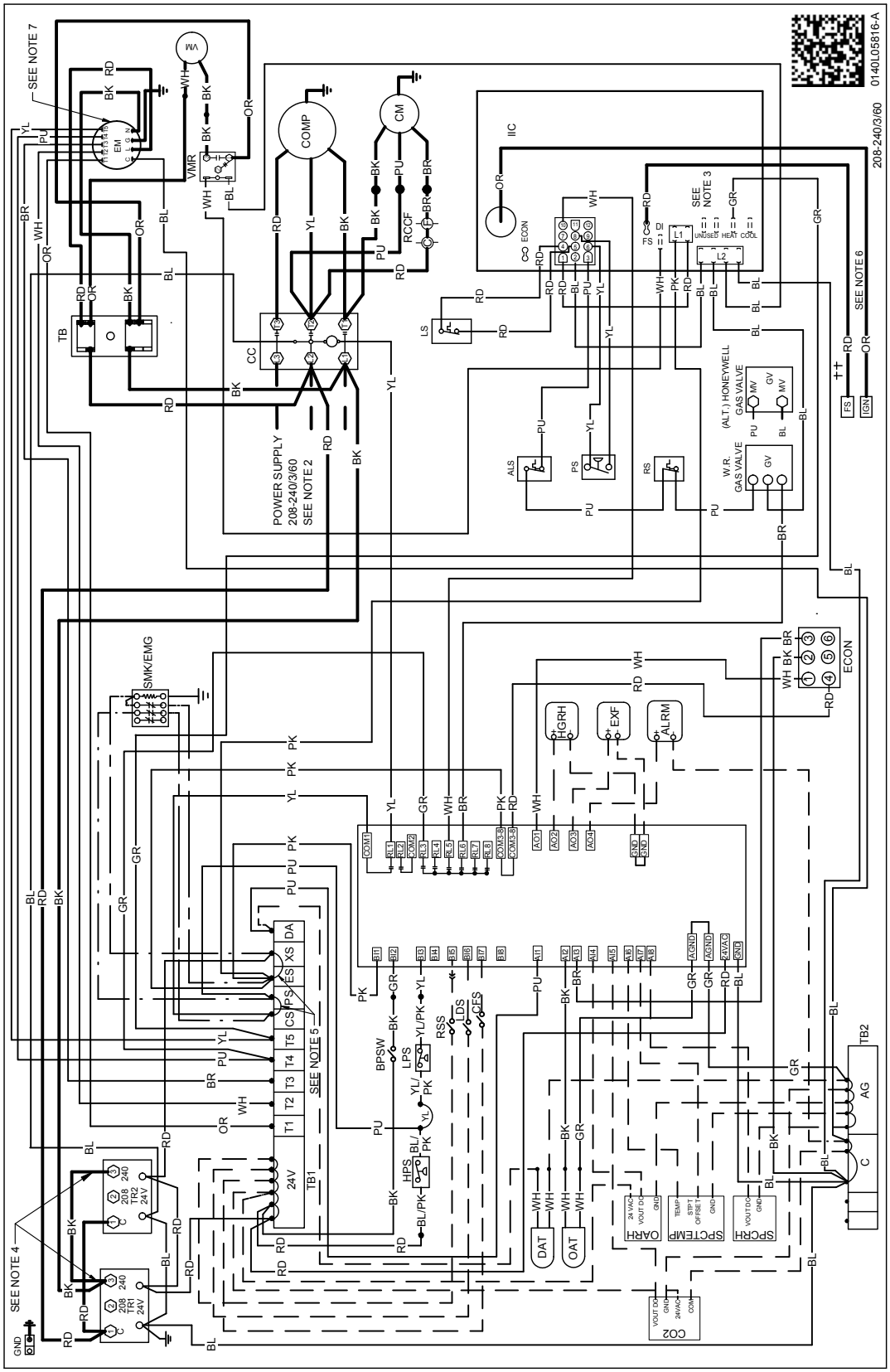

WARNING — ***High Voltage:*** Disconnect all power before servicing or installing this unit. Multiple power sources may be present. Failure to do so may cause property damage, personal injury, or death.

Wiring is subject to change. Always refer to the wiring diagram on the unit for the most up-to-date wiring.

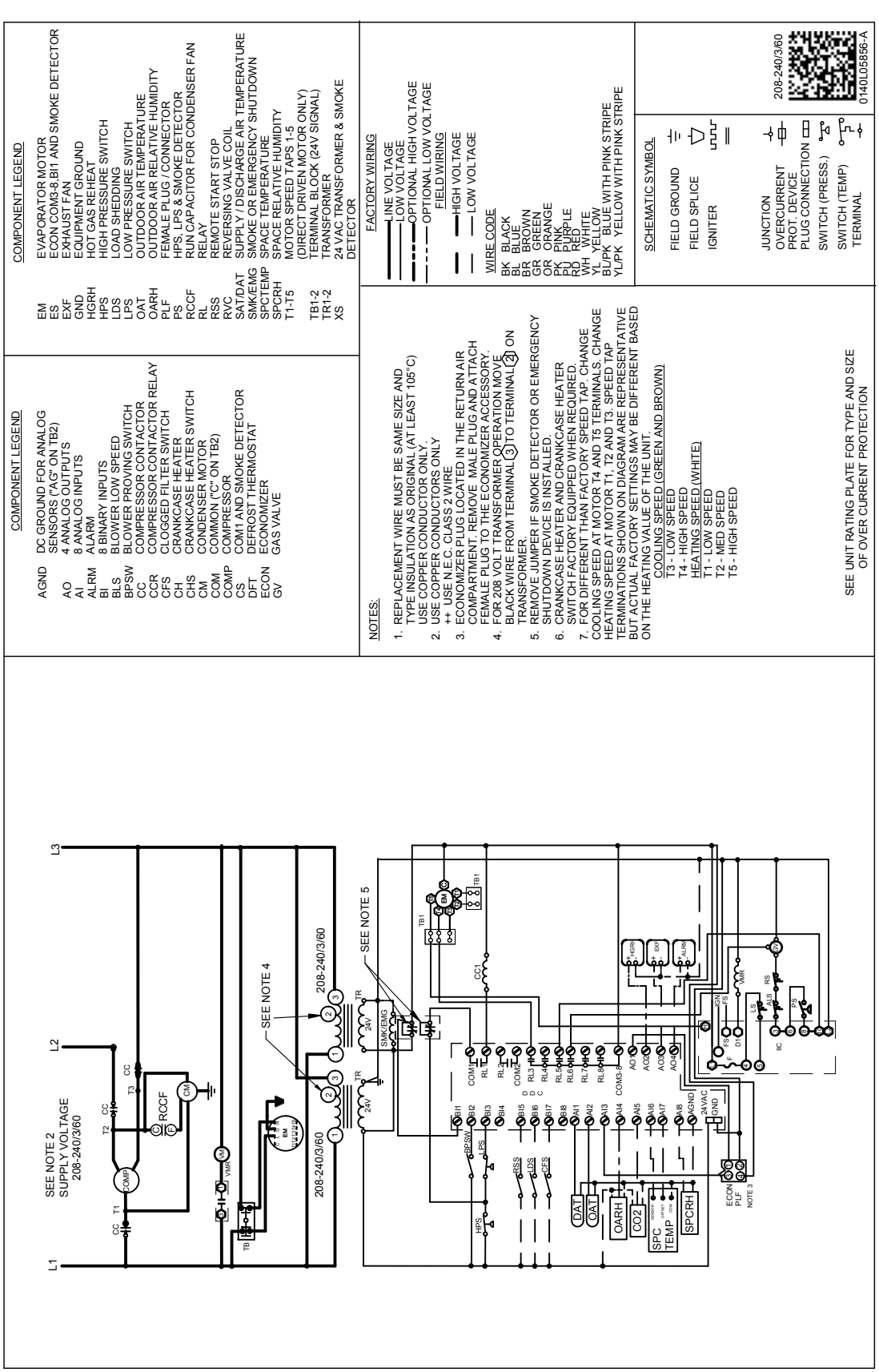

WARNING — ***High Voltage:*** Disconnect all power before servicing or installing this unit. Multiple power sources may be present. Failure to do so may cause property damage, personal injury, or death.

Wiring is subject to change. Always refer to the wiring diagram on the unit for the most up-to-date wiring.

DAIKIN MASTER ITEM #	DESCRIPTION	FITS MODEL SIZES	FIELD-INSTALLED	FACTORY-INSTALLED	OPERATING WEIGHT (LBS)
	Curb				
14CURB3672	14" Roof Curb	3-5 tons	√		86
18CURB3672B	18" Roof Curb	3-5 tons	√		100
24CURB3672B	24" Roof Curb	3-5 tons	√		128
GHRC-3672	Hurricane Restraint Clips	3-5 tons	√		2
	Ultra Low-Leak Economizer & Power Exhaust[1]				
10-455-09A-23	Centrifugal Power Exhaust 230v	3-5 tons	√		60
01-450-02	Barometric Relief Damper for Ultra Low-Leak Economizer	3-5 tons	√		15
1036609C	Ultra Low-Leak Downflow Economizer w/ Enthalpy	3-5 Tons	√	√	71
10-396-09	Ultra Low-Leak Horizontal Economizer w/ Enthalpy	3-5 Tons	√		71
10-465-09B-21	Prop Power Exhaust 230v	3-5 Tons	√		55
	Low-Leak Economizer & Power Exhaust[2]				
DDNECNJ3672C	Low-Leak Downflow Economizer	3-5 tons	√	√	82
DPE36722	Downflow Power Exhaust (208/230 Volt)	3-5 tons	√		55
DHZECNJ3672	Horizontal Economizer	3-5 tons	√		70
DHPE36722	Horizontal Power Exhaust (208/230 Volt)	3-5 tons	√		55
	Downflow Accessories				
D25FD3672	25% Manual Fresh Air Damper	3-5 tons	√		12
D25MFD3672	25% Motorized Fresh Air Damper	3-5 tons	√		16
DNBBS3672B	Burglar Bar Sleeves with Supply & Return	3-5 tons	√		30
DDNECNJ3672NR	Downflow Economizer2 w/o Barometric Relief	3-5 tons	√		77
DDNSQRD3616	Downflow Square-to-Round Adapter (16" Round)	3 tons	√		45
DDNSQRD487218	Downflow Square-to-Round Adapter (18" Round)	4-5 tons	√		35
	Horizontal Accessories				
DBRD3672	Horizontal Barometric Relief Damper	3-5 tons	√		15
	Concentrics				
CDK36515	Concentric Duct Kit Flush Mount w/Filter	3 tons	√		27
CDK36	Concentric Duct Kit	3 tons	√		27
CDK4872	Concentric Duct Kit	4-5 tons	√		27
	DDC Accessories[3]				
	DDC communicating controller (built-in BACnet® MS/TP) includes Standard Room Sensor to be installed in field	3-5 tons		√	2
10366D09C	DDC Ultra Low-Leak Downflow Economizer	3-5 tons	√	√	71
10396D09	DDC Ultra Low-Leak Horizontal Economizer	3-5 tons	√		71
10465DDC	Power Exhaust kit used with DDC Ultra Low-Leak Economizer	3-5 tons	√		1
DLAKT01	Low-Ambient	3-5 tons	√	√	2
LONKT01	LonWorks® card	3-5 tons	√		1
3PMK01	Phase Monitor (3-Phase Only)	3-5 tons	√	√	2
DFSKT01	Dirty Filter Switch	3-5 tons	√		1

DAIKIN MASTER ITEM #	DESCRIPTION	FITS MODEL SIZES	FIELD-INSTALLED	FACTORY-INSTALLED	OPERATING WEIGHT (LBS)
	Crankcase Heater Kits				
0163R00002S	40W 230V	3 tons	√		1
0130L00017S	70W 230V	4 - 5 tons	√		1
	High Efficiency Filters				
0160L00203	High Efficiency MERV 13 Air Filter Nom. Size: 24x24x2; (Order Qty 1)	3 tons	√		2
0160L00204	High Efficiency MERV 13 Air Filter Nom. Size: 14x20x2; (Order Qty 4)	4 tons	√		4
0160L00205	High Efficiency MERV 13 Air Filter Nom. Size: 16x20x2; (Order Qty 4)	5 tons	√		4
	Misc Accessories				
HAILGD03D	Condenser Coil Hail Guard	3-4 tons	√		19
HAILGD04D	Condenser Coil Hail Guard	5 tons	√		22
	Convenience Outlet: Non Powered	3-5 tons		√	2
	Convenience Outlet: Powered	3-5 tons		√	42
HA036300	High Altitude Kit	3-5 tons	√		1
LPM-07	LP Conversion Kit (DTG036045 only)	3 tons	√		1
LPM-08	LP Conversion Kit (DTG units only)	3-5 tons	√		1
LAKT11	Low Ambient Kit, 208-230V - non-DDC	3-4 tons	√	√	14
LAKT12	Low Ambient Kit, 208-230V - non-DDC	5 tons	√	√	14
3PMNDK01	Phase Monitor (3-Phase Only) - Non DDC	3-5 tons	√	√	2
	Smoke Detector (supply and/or return air)	3-5 tons		√	11
	Hinged Panels	3-5 tons		√	10
220-GX-001	Flue Extension Kit	3-5 tons	√		3

[1] Use Economizer & Power Exhaust listed within Ultra Low-Leak section

[2] Use Economizer & Power Exhaust listed within Low-Leak section

[3] For a full list of DDC accessories, please refer to DDC Controller Technical Guide manual (DK-DDC-TGD-01B)

Note: Where multiple variations are available, the heaviest combination is listed.

Our continuing commitment to quality products may mean a change in specifications without notice.
© 2018 **DAIKIN COMPANY, L.P.** • Houston, Texas • Printed in the USA.